SECOND EDITION

MTMCTEA REF 97-55-22

Marine Lifting and Lashing Handbook

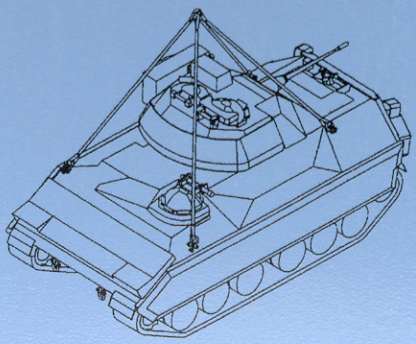

Go to Contents

LIFTING

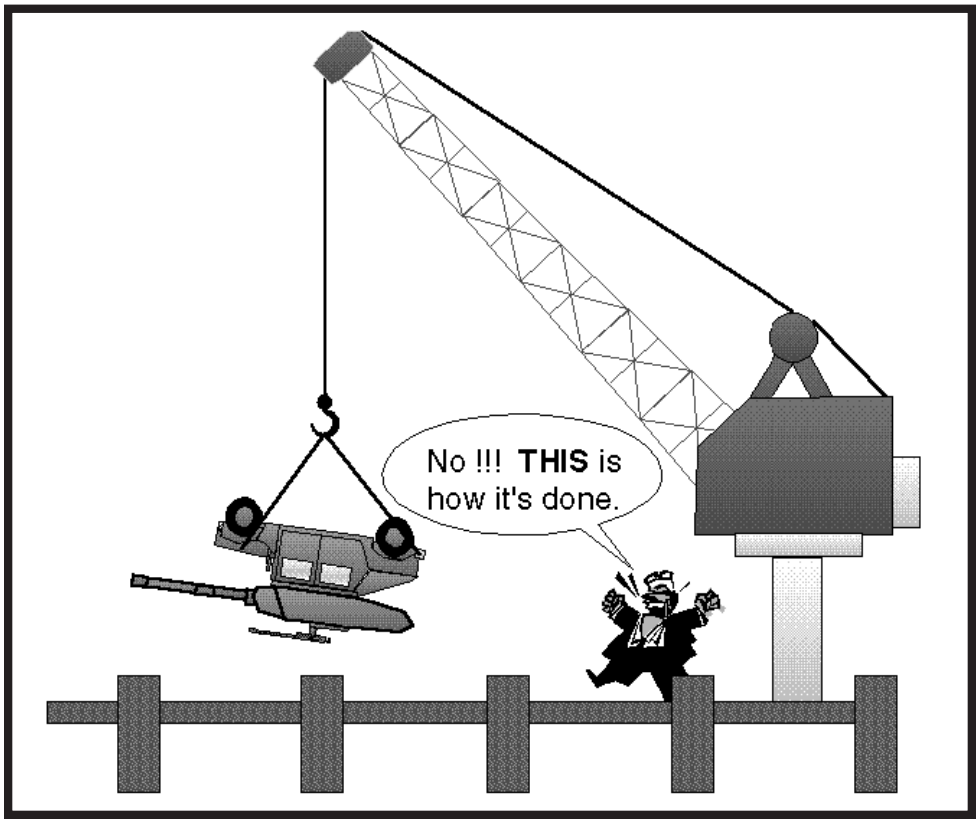

GUIDANCE

Marine Lifting and

Handbook

SECOND EDITION
OCTOBER 1996

John T. Atwood
Terry L. Jenkins
G. Philip Raiford
John T. H. Germanos
Robert E. Kerr
R. Bryan Reyns

MILITARY TRAFFIC MANAGEMENT COMMAND
TRANSPORTATION ENGINEERING AGENCY
720 THIMBLE SHOALS BLVD, SUITE 130
NEWPORT NEWS, VIRGINIA 23606-2574

This is the second edition of this handbook. It supersedes the first edition (March 1995) and MTMCTEA PAM 56-1, *Marine Terminal Lifting Guidance.* However, copies of the first edition and MTMCTEA PAM 56-1 still have value, and you may continue to use any copies you have.

This book is part of the series started with MTMCTEA PAM 55-19, *Tiedown Handbook for Rail Movements.* The books in this series are:

MTMCTEA PAM 55-19, *Tiedown Handbook for Rail Movements*
MTMCTEA REF 96-55-20, *Tiedown Handbook for Truck Movements*
MTMCTEA REF 95-55-21, *Lifting and Tiedown of U.S. Military Helicopters*
MTMCTEA REF 97-55-22, *Marine Lifting and Lashing Handbook*
MTMCTEA REF 95-55-23, *Containerization of Military Vehicles*

Local reproduction of this and all listed books is authorized.

To obtain copies of this book, or others in this series, telephone DSN 927-4646, (757) 878-4646 or 1-800-722-0727.

Table of Contents

Page

Preface iv

TIEDOWN GUIDANCE

SECTION

I. Introduction 1-1
II. Tips and Common Mistakes 2-1
III. Lifting Hardware 3-1
IV. Lifting Wheeled Vehicles 4-1
V. Lifting Trailers 5-1
VI. Lifting Tracked Vehicles 6-1
VII. Lifting Containers 7-1

INDEX

Located after Section VII.

Preface

The shifting emphasis within our National Military Strategy has placed an unprecedented burden on our ability to meet our Crisis Response requirements. The potential for engaging in multiple lesser regional contingencies has become a reality. Never before has so much attention been focused on our strategic lift capability. While airlift is essential for moving people, supplies, and priority items, sealift is the primary means of moving military equipment. Because of the time required to deploy by sea and the relative weight and cube of the equipment involved, strategic sealift becomes the longest leg of the fort-to-foxhole deployment scenario. The purpose of this reference is to shorten this leg by providing standard marine terminal guidance for lifting and lashing military equipment on various strategic ships.

This publication provides users with the proper lifting methods for loading general equipment aboard marine vessels and general procedures for securing military cargo on marine vessels. The publication includes equipment characteristics condensed from TACOM vehicle characteristics sheets, transportability guidance technical manuals (TGTMs), and field experience gained through participating in military exercises. The handbook does not include all military equipment found in the Army inventory. Rather, it covers military equipment commonly encountered during stevedore operations. Helicopters are not covered in this reference. We have published a separate reference, MTMCTEA REF 95-55-21, which specifically addresses helicopters.

Throughout the publication, warnings, cautions, and notes emphasize important or critical guidance.

WARNING

Highlights an operating or maintenance procedure, practice, condition, statement, and so forth, that, if not strictly observed, could result in injury to or death of personnel.

CAUTION

Highlights an operating or maintenance procedure, practice, condition, statement, and so forth, that, if not strictly observed, could result in damage to, or destruction of, equipment or loss of mission effectiveness or long term health hazards to personnel.

NOTE

Highlights an essential operating or maintenance procedure, condition, or statement.

Remember, all equipment loaded onto cargo trucks or secured onto semitrailers, must be firmly and properly secured to counteract longitudinal (fore and aft), lateral (side to side), and vertical (up and down) forces encountered during lifting and tiedown operations. All hazardous material must comply with the Code of Federal Regulations (CFR), Title 49, and all movements of oversize, overweight, or special equipment must be according to AR 55-162, *Permits for Oversize, Overweight, or Other Special Military Movements on Public Highways in the United States*.

MTMCTEA welcomes comments and recommendations for improving this publication. Readers may send their suggestions by letter, on DA Form 2028, or on a marked copy of a page(s) of the publication to Director, Military Traffic Management Command Transportation Engineering Agency, ATTN: MTTE-DPE, 720 Thimble Shoals Blvd, Suite 130, Newport News, VA 23606-2574. Questions can be answered by telephoning DSN 927-4646, (757) 878-4646, or 1-800-722-0727.

Back to Contents

Section I. Introduction

Whenever possible, military equipment should be driven on and off ships, for obvious reasons. However, for situations that do not facilitate RORO operations, equipment may be required to be lifted on and off the vessel. In such cases, military shippers assume responsibility for lifting operations at the ports. The following sections provide users with the proper lifting methods for loading general equipment aboard marine vessels. The guidance presented herein should be followed as closely as possible to ensure that safe lifting practices are followed.

Section III describes various lifting hardware, to include spreader bars, sling assemblies, and so forth. The hardware shown is used throughout sections IV through VII, appearing in the diagrams that illustrate lifting procedures for wheeled vehicles, trailers, tracked vehicles, and containers, respectively.

The lifting hardware and procedures described in sections III through VII will ensure equipment can be safely lifted. However, situations typically arise in the field that preclude using standard procedures. Section II, Tips and Common Mistakes, provides useful information for dealing with such situations.

The following symbols are used in the lifting sections of this handbook:

spreader bar

●

shackle

○

Back to Contents

Section II. Tips and Common Mistakes

A. Preparing Vehicles Prior to Lifting

1. Make sure all lifting/tiedown shackles are attached to the vehicle.

2. Secure all secondary cargo in the beds of trucks/trailers with banding. Bands should be at least 3/4 by 0.020 inches.

3. Make sure fuel tanks are filled in accordance with the MTMC port call message.

4. Make sure vehicle weights are **accurately** measured and documented. Inaccurate weights could result in unsafe lifts. Also, if vehicles are overloaded, shippers must be aware of the potential handling hazards to prevent safety risks.

5. Fold mirrors to avoid damage to them and other vehicles.

6. Set parking brake just prior to lifting to prevent the vehicle from rolling when it is set down.

CAUTION

If the parking brake is not set and the vehicle tilts forward, landing on its front wheels first, it will roll forward until the rear wheels make contact. Keep personnel clear of the front of vehicles, <u>especially</u> near bulkheads.

B. Lifting Vehicles

1. Visually inspect slings for damage prior to each lift. Also, check to ensure all shackles and bolts are tight.

2. Place hooks, point down through the shackle or lifting provision (see illustration on next page).

3. If shackles are used, make sure screw pins are fully screwed in.

4. Tag lines (guidelines) should be attached to the lowest point on the lifting slings. Do not attach tag lines to the vehicles, this wastes time.

5. Vehicles should be positioned for lifting so that they will not require reorienting before being set down on the ship.

6. Position crane hook over anticipated center of gravity (CG) of vehicle to prevent equipment from swinging when it is lifted (see vehicle transportability data plate). If CG is not known, position hook over center of vehicle to minimize swinging.

7. Place padding between the slings and any edges or points of contact that may cause damage to the equipment or to the slings.

8. Make sure that the slings and spreader bars are of the proper strength and length for the lift.

Proper hook placement for lifting and lashing vehicles.

C. General

1. All personnel should be equipped with gloves and hard hats.

2. There should be only **one** ground guide that signals the crane operator.

3. All personnel should be briefed on safety and be alert to any situations that may arise. Anyone should be able to stop the lift.

4. **Never** wrap tag lines around any part of your body.

5. **Never** walk under a piece of equipment that is being lifted.

6. **Never** stand between a piece of equipment that is being lifted and anything on the ground or on the ship that you could be pinned against.

7. **Never** ride on a piece of equipment that is being lifted.

8. Tiedown devices should not be hung on equipment for lifting onto the ship. Place them inside the cab or the cargo bed for lifting.

Lifting Checklist

- ☐ Ensure everyone has had safety briefing.
- ☐ Make sure everyone has a hard hat and gloves.
- ☐ Make sure everyone knows where the emergency facilities are before starting operations.
- ☐ Ensure that all vehicle shackles are in place and secure.
- ☐ Make sure the parking brake is set.
- ☐ Ensure that the proper sling assembly is being used for each lift.
- ☐ Inspect all lifting gear to ensure that it is in good working condition.
- ☐ Check all shackles and fittings to ensure that they are secure.
- ☐ Ensure tag lines are securely tied to the slings.
- ☐ Ensure tag lines are free of kinks, knots, and loops.
- ☐ Ensure that crane hook is over center of gravity (CG) or anticipated CG of vehicle.
- ☐ Place hook, point down through shackle.
- ☐ Ensure that everyone is clear of the vehicle before lifting.
- ☐ Ensure that the crane operator has clear unobstructed view of ground guide at all times.
- ☐

Lifting Checklist, continued.

- ☐ Do not hang lashings from vehicles to be lifted.
- ☐ If a vehicle's front wheels are going to land first, allow space for vehicle to roll forward until the rear wheels come in contact with the deck.
- ☐ If anyone observes an unsafe situation they should stop the lift immediately.
- ☐ Consult MTMCTEA REF 95-55-21 and appropriate technical manuals for lifting helicopters.

Back to Contents

Section III. Lifting Hardware

Stevedore companies must provide spreader bars and sling assemblies at least as strong as specified in MIL-S-22824 (Navy), *Slings, Multiple Leg, Vehicle (Shipboard Loading)*. Web slings used instead of wire rope must have a nominal breaking strength equal to or greater than the wire rope. Web slings must also be protected from cutting or fraying. Wire rope material is 6 x 37, Type I, Class 3, improved plow steel, independent wire rope core (IWRC), unless otherwise noted. Wire rope for size 60 and 60A 60-ton slings shall be of extra improved plow steel.

WARNING

Wire rope shall not be used if, in any length equal to eight times the rope diameter, the number of visible broken wires exceeds 10 percent of the total number of wires in the rope or if the rope shows other signs of excessive wear, corrosion, kinking, or defect. (46 Code of Federal Regulations, para 91.37-50(C)). Revised as of 1 October 1991.

Sling assemblies are illustrated and described in this section. Diagrams in sections IV through VII specify the appropriate sling requirements.

Longer lower leg assemblies may be used by stevedore companies as necessary, depending upon the vessel being loaded.

Wire rope diameters are based on the gross vehicle weight (GVW) or the combat weight of the equipment.

WIRE ROPE STRENGTH

Wire rope strength is usually measured in tons of 2,000 pounds and rated to a breaking strength. Breaking strength is the nominal strength for a rope. When wire rope is placed under tension on a test device, new ropes will actually break at a figure equal to, or higher than, the rated breaking strength.

The U.S. Government acceptance strength on wire ropes shall not be less than 97-1/2 percent of the nominal breaking strength. All new or unused rope must meet U.S. Government acceptance strength.

The strength of a wire rope to be used in a specific application is determined by four factors: wire rope diameter, type of construction, grade of wire, and type of core.

Table 3-1 (see next page) lists the nominal strengths for slings constructed of 6 x 19 and 6 x 37, Type I, Class 3 improved and extra improved plow steel IWRC.

Observe the following sling safety considerations:

- Remember that, as the angle of a sling is increased, the ability of the sling to support a load decreases. At 45°, slings will be able to support only 70% of their nominal capacity. Do not lift with angles of less than 45° from horizontal (or more than 45° from the vertical).

- Never overload a sling, and never apply loads suddenly.

- Never be too confident of a new sling. Do not overload it because it is new.

Other lifting materials, such as chains or nylon web slings of adequate size and strength, may be substituted if they do not damage vehicle components and if they can be readily adapted to the sling leg. A lifting bar of adequate size and strength also may be substituted if the lifting bar does not contact any component of the vehicle beneath the frame, such as the winch, engine, or steering gear.

Table 3-1. Nominal Strength of Slings Constructed of 6 x 19 and 6 x 37 Improved Wire Rope Core with Flemish Eye Splice.

	Nominal Strength (tons)	
Nominal Diameter (inches)	Improved Plow Steel	Extra Improved Plow Steel
1/2	11.5	13.3
5/8	17.7	20.6
3/4	25.6	29.4
7/8	34.6	39.8
1	44.9	51.7
1 1/4	69.4	79.9
1 1/2	98.9	114
1 3/4	133	153
2	172	198
2 1/4	215	247
2 1/2	262	302
2 3/4	314	361

NOTE
Nominal strength reflects a 10% reduction in wire rope strength due to flemish eye splice.

MIL-S-22824 (Navy) provides details for making sling assemblies. Pages 3-5 through 3-13 show three assemblies from MIL-S-22824 (Navy).

Organizations that wish to construct their own sling assemblies must do so in accordance with MIL-S-22824 (Navy). In addition to leg assemblies shown on pages 3-5 through 3-13, a lifting beam (8- x 6-1/2 in x 9-ft long, regular wide flange, 24 lbs per ft), special lifting provision for expansible vans and fuel semitrailers (see page 4-17), and the following will be needed:

Table 3-2. Sling Assembly Materials.

Diameter	Length	Item	Quantity
2-1/2-in.	NA	Shackle (RR-C-271) NSN 4030-01-187-0964	4
1-1/2-in.	NA	Shackle (RR-C-271)	4
1-3/4-in.	25-ft	Wire rope, extra improved plow steel	4
1-3/4-in.	16-ft	Wire rope, extra improved plow steel	4
1-3/4-in.	4-ft	Wire rope, extra improved plow steel	2
3/4-in.	4-ft	Wire rope, improved plow steel	2
5/8-in.	3-ft	Wire rope, improved plow steel, without thimbles	2

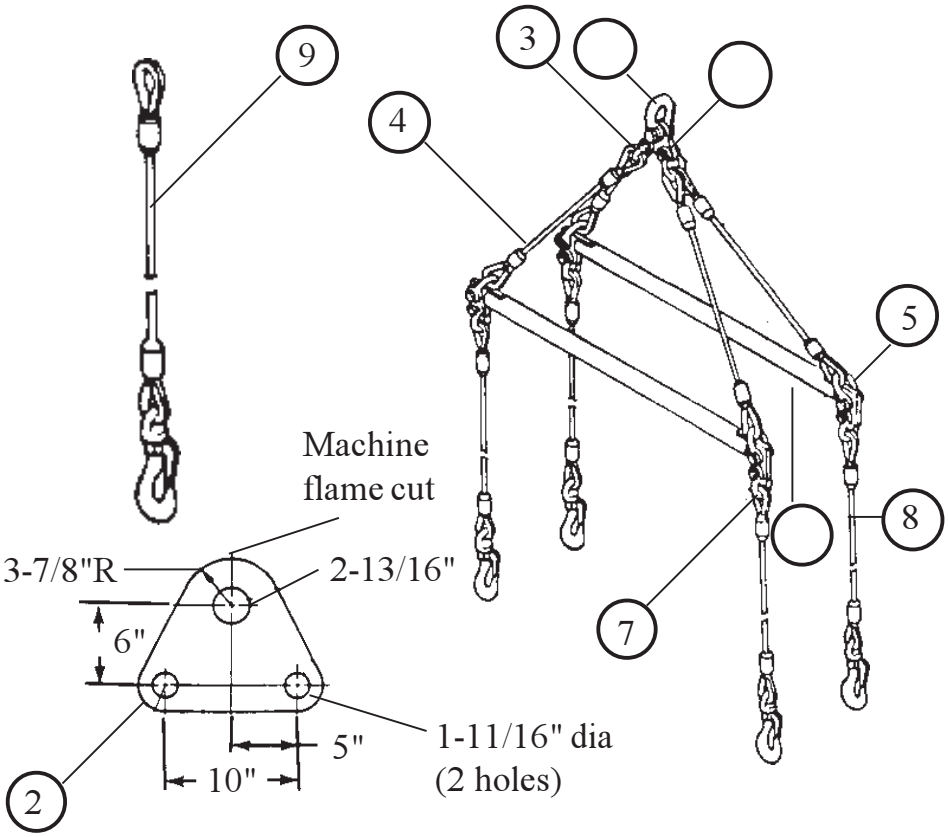

Flounder Plate Detail

① Shackle, 2-1/2-inch diameter
② Flounder plate, 2-inch plate thickness
③ Shackle, 1-1/2-inch diameter
④ Upper leg assembly (page 3-8)
⑤ Shackle, 1-3/8-inch diameter
⑥ Spreader bar (page 3-12)
⑦ Shackle, 1-1/4-inch diameter
⑧ Lower leg assembly (page 3-8)
⑨ Extension leg assembly (page 3-8)
(4 short and 4 long required)

Thirty-ton sling assembly.

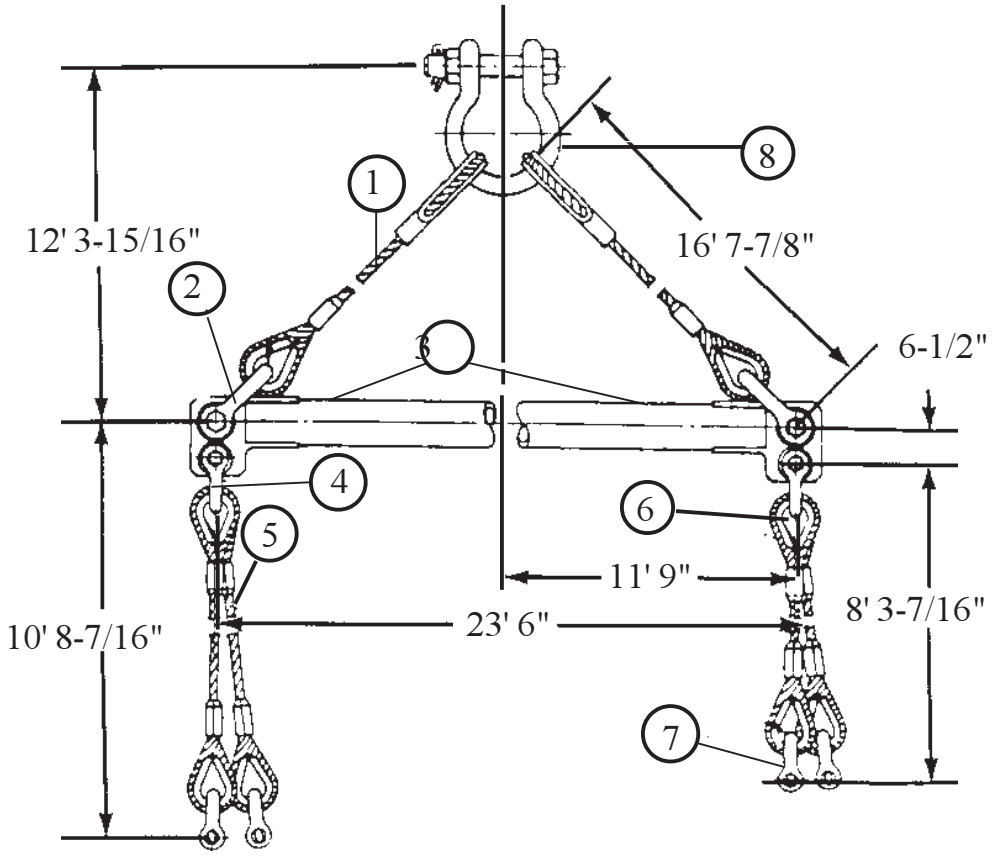

① Upper leg assembly (page 3-10)
② Shackle, 2-1/2-inch diameter
③ Spreader bar (page 3-12)
④ Shackle, 2-inch diameter
⑤ Lower leg assembly (page 3-8)
8 feet 11 inches (2 required)
⑥ Lower leg assembly (page 3-8)
7 feet 1 inch (2 required)
⑦ Shackle, 1-1/2-inch diameter, screw pin
⑧ Shackle, 3-inch diameter

Sixty-ton, size 60 sling assembly.

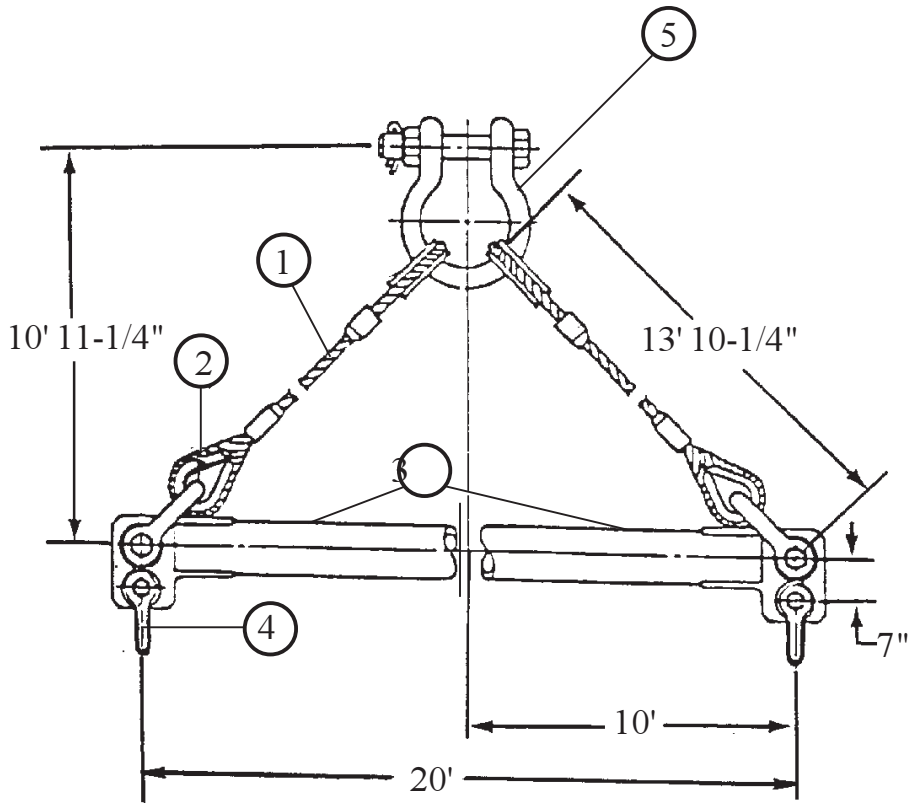

1. *Upper leg assembly (page 3-11)*
2. *Shackle, 2-1/2-inch diameter*
3. *Spreader bar (page 3-12)*
4. *Shackle, 2-1/2-inch diameter*
5. *Shackle, 3-inch diameter*

Sixty-ton, size 60A sling assembly.

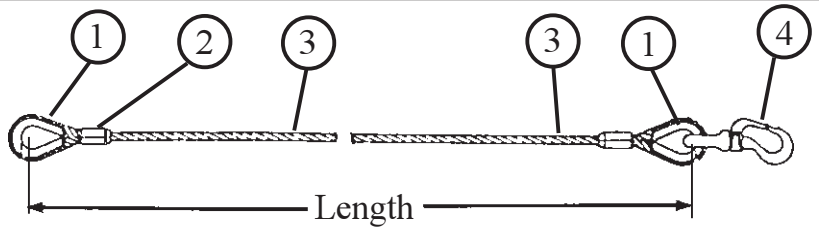

Notes:

1. ***Thimbles shall be in same plane ± 15º.***

2. ***Tolerance on sling legs shall be ± 2 rope diameters or ± 0.5 percent of lengths, whichever is greater.***

(1) Thimble (2 required)

(2) Swage sleeve (2 required)/flemish eye only

(3) Wire rope

(4) Safety hook must swivel under load 360º. Positive locking safety latch or equal. No positioning hook is acceptable.

LOCATION	SLIN SIZE	WIRE ROPE DIA (IN.)	LENGTH	SAFET HOOK (TON)	QUANTITY
UPPER LEG	30	1-1/8	5 ft 6 in.	None	4
LOWE LEG	30	1	9 ft 7-5/16 in.	10	4
	60	1-3/4	7 ft 1 in.	None	2
	60A	1-3/4	8 ft 11 in.	None	2
EXTE SION	30	1	5 ft 6-1/2 in.	10	4
	30	1	3 ft 9-1/2 in.	10	4

Leg assemblies.

Flemish Eye Splice

Sling eyes are formed using the flemish eye splice as illustrated below. The ends are secured by pressing a metal sleeve over the ends of the strands of the splice. Pull is directly along the centerline of rope and eye. This gives the most efficient use of rope capacity and is economical.

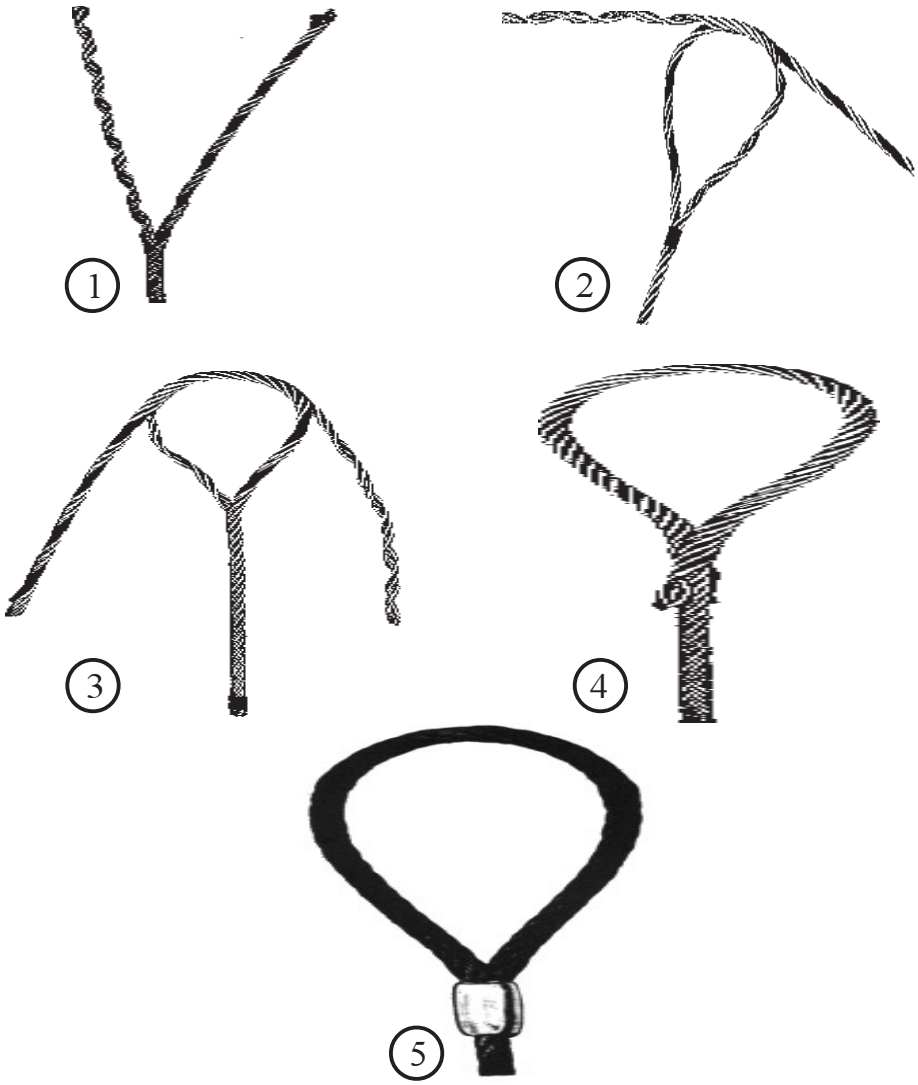

Flemish eye splice.

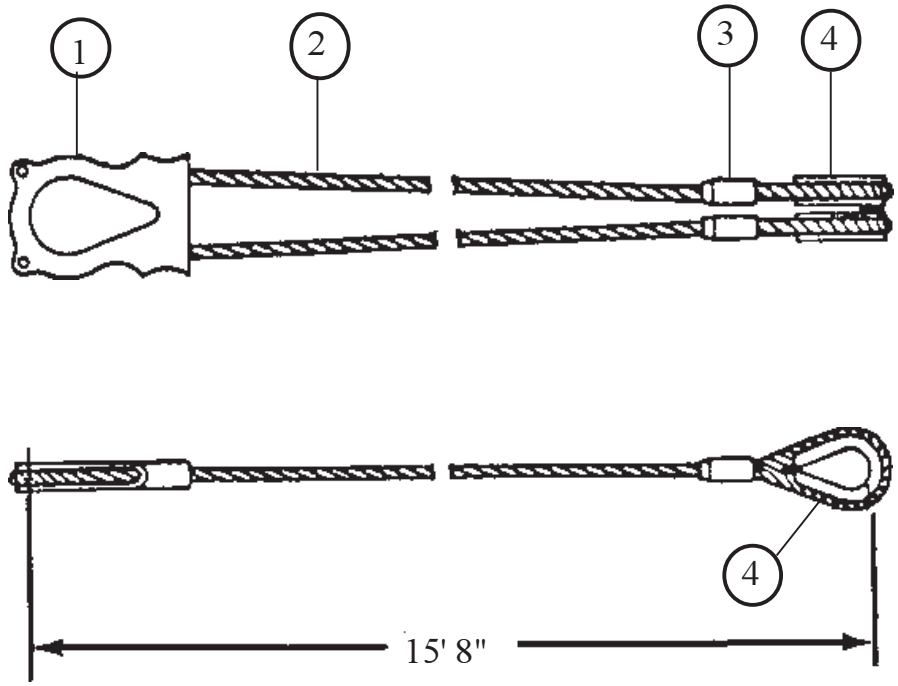

NOTE
Equalizing thimble and single groove thimbles are $90^0 \pm 15^0$ to each other.

1. *Equalizing thimble, 9 in x 15 in inside dimension (1 required)*
2. *Wire rope, 1-3/4-inch diameter*
3. *Swaged sleeve (2 required)*
4. *Thimble, 1-3/4-inch single groove (2 required)*

Upper leg assembly, 60-ton, size 60.

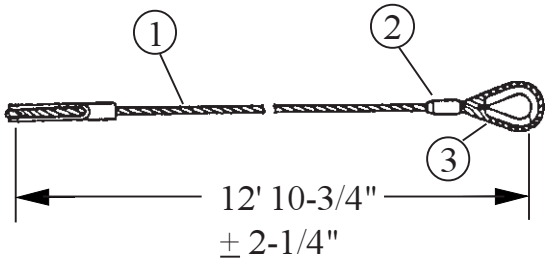

NOTE
Thimbles are 90° ± 15° to each other.

1. *Wire rope, 2-1/4-inch diameter*
2. *Swaged sleeve (2 required)*
3. *Thimble, 2-1/4-inch single groove (2 required)*

Upper leg assembly, 60-ton, size 60A.

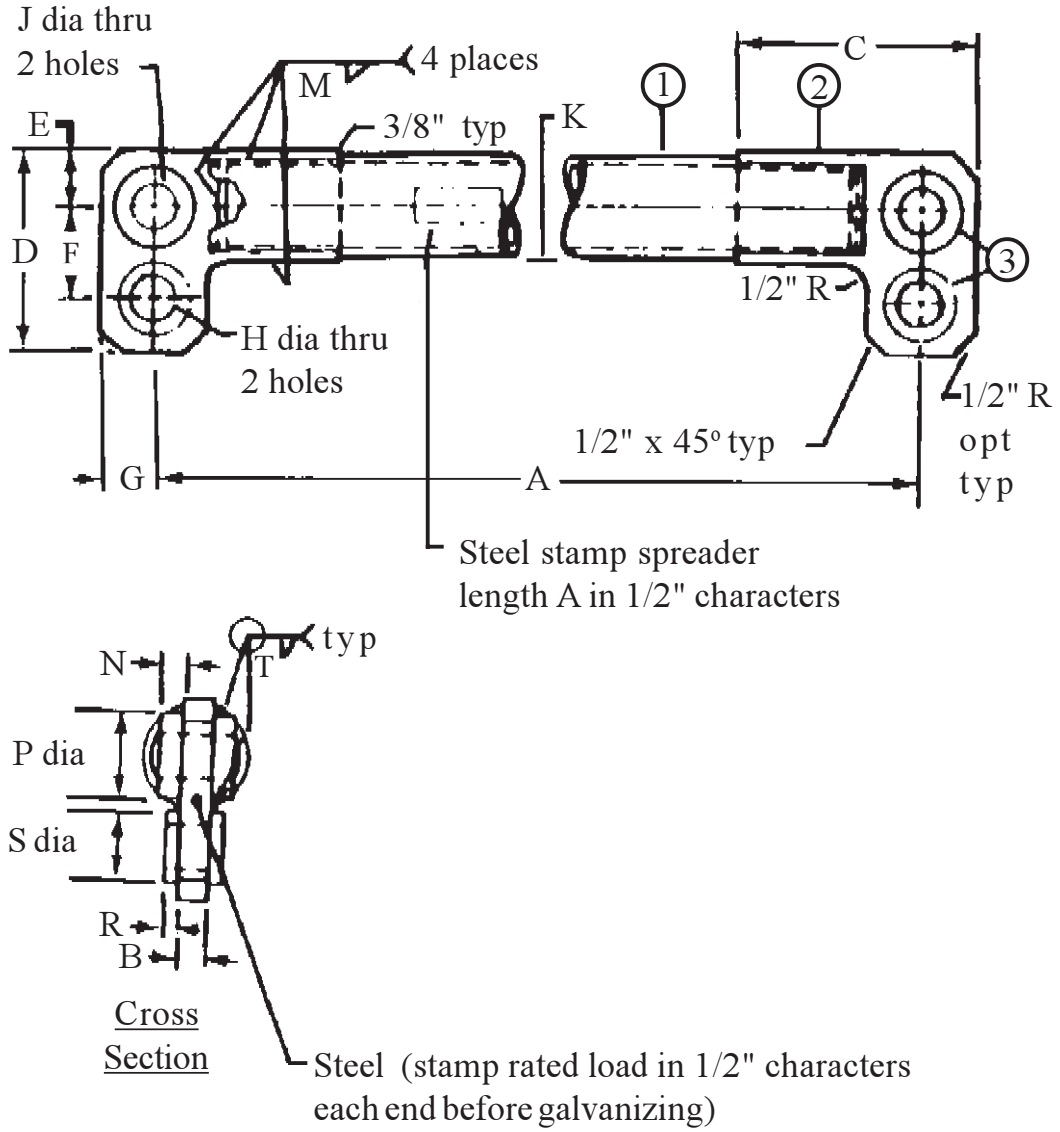

① Seamless schedule 40 steel pipe

② Steel plate

③ Steel boss (used on both sizes 60 and 60A)

Spreader bar.

Spreader Bar Dimensions
(in inches unless noted otherwise)

	REF LTR	30 TON	60 TON	60A 60 TON
Spreader Length	A	9 ft 0 in.	23 ft 6 in.	20 ft 0 in.
Plate thickness	B	1-1/8	2	2
Plate length	C	8-1/2	20	20
Plate height	D	7-3/8	14-3/4	15
Hole center line	E	2	4-3/4	4-3/4
Hole center line	F	3-1/2	6-1/2	7
Hole center line	G	1-15/16	5	5
Hole dia	H	1-1/2	2-3/8	2-7/8
Hole dia	J	1-5/8	2-7/8	2-7/8
Pipe dia (NOM)	K	3	8	8
Weld size	M	3/16	5/16	5/16
Plate thickness	N	------	1	1
Plate diameter	P	------	6	6
Plate thickness	R	------	5/8	1
Plate diameter	S	------	5	6
Weld size	T	------	3/8	3/8
No. of bars/set		2	1	1

NOTES

1. Tolerance for dimension A, all sizes, is + 1/4 inch.
2. Tolerance for dimensions H and J, size 30 ton, is + 1/32 inch.
3. Tolerance for all other dimensions is + 1/16 inch.
4. Cut or machined surfaces will have a roughness height value of 500 microinches.
5. Surface roughness will be as rolled, drawn, or fabricated.
6. Remove burrs and sharp edges.

Spreader bar, continued.

Back to Contents

Section IV. Lifting Wheeled Vehicles

Do not install lifting slings on the front bumper shackles of the M39-, M809-, and M939A1-series 5-ton truck. Use a 4-foot assembly of 3/4-inch diameter, or larger, 6 x 19 IWRC wire rope with a loop in each end. Each loop will have a thimble. The loop with thimble may have a splice or swaged fitting. A zinc-covered fitting with an eye large enough to fit a sling leg or shackle may be used in place of loop with thimble. Use malleable sheet metal or hard-cushioning strips at sharp corners and edges to prevent cutting the wire rope or damaging the vehicle.

WARNING

Before lifting 5-ton series trucks, check the rear spring pin used for lifting. The proper pin is National Stock Number 5315-01-206-2239, part number 7339963-1. Some pins already have been replaced by the U.S. Army Tank Automotive Command. These pins have a "B" stamped on the end. If the pin does not meet one of the above requirements, replace the pin before lifting the vehicle.

Table 4-1 lists the vehicles by model number that are illustrated in this section. Not all of the vehicles listed have individual figures. Instead, all vehicles with similar lifting configurations are represented by a single diagram. For example, the 2-1/2-ton cargo truck is represented by the same diagram as the 5-ton dump truck. Also included are the curb weight and gross vehicle weight, if applicable. This information is required to determine the strength requirements of the lifting hardware used.

Table 4-1. Wheeled Vehicles (Lifting).

Model	Item	Curb Weight (lb)	Gross Weight (lb)	Page
H40XL	Forklift, 4K, Hyster	8,730	N/A	4-28
H60XL	Forklift, 6K, Hyster	10,915	N/A	4-28
M10A	Trk, Forklift, 10,000 lb, RT	36,315	N/A	4-8
M35A1/2	Trk, Cargo, 2-1/2-ton, WWN	13,720	18,720	4-11
M49A2C	Trk, Tank, Fuel, 2-1/2-ton, WWN	14,860	19,180	4-11
M50A3	Trk, Tank, Water, 2-1/2-ton, WWN	15,150	19,400	4-11
M51A2	Trk, Dump, 5-ton,	22,665	32,663	4-11
M52	WWN	17,948	N/A	4-12
M62	Trk, Tractor, 5-ton	32,270	N/A	4-11
M63	Trk, Wrecker, Med, WWN	18,934	N/A	4-11
M109A3	Trk, Chassis, 5-ton, WWN	15,800	20,800	4-11
M246A2	Trk, Van, Shop 2-1/2-ton, WWN	32,990	N/A	4-11
M275A2	Trk, Wrecker, Med, WWN	12,645	N/A	4-11
M291A1D	Trk, Tractor, 2-1/2-ton, WWN	25,572	N/A	4-17
M342A2	Trk, Van, Exp, 2-1/2-ton	15,775	20,775	4-11
M543A2	Trk, Dump, 2-1/2-ton, WWN	34,250	N/A	4-12
M813	Trk, Wrecker, Med, WWN	21,020	31,020	4-11
M813A1	Trk, Cargo, 5-ton	21,120	31,120	4-11
M814	Trk, Cargo, 5-ton, WWN	23,540	33,540	4-11
	Trk, Cargo, 5-ton, WWN			

Table 4-1. Wheeled Vehicles (Lifting), continued.

Model	Item	Curb Weight (lb)	Gross Weight (lb)	Page
M815	Trk, Bolster, Log 5-ton, WWN	21,040	31,040	4-11
M816	Trk, Wrecker, 5-ton WWN	35,050	N/A	4-11
M817	Trk, Dump, 5-ton, WWN	23,755	33,755	4-11
M818	Trk, Tractor, 5-ton WWN	20,165	N/A	4-12
M819	Trk, Wrecker, 5-ton, WWN	35,065	N/A	4-11
M820	Trk, Van, Expansible, 5-ton	28,185	33,195	4-17
M820A2	Trk, Van, Expansible, 5-ton	30,195	35,195	4-17
M821	Trk, Stake, 5-ton, WWN	28,880	38,880	4-11
M911	Trk, Tractor, HET, 22-1/2-ton	39,952	N/A	4-13
M915	Trk, Tractor Line Haul, 14-ton	18,500	N/A	4-14
M915A1	Trk, Tractor, Line Haul, 25-ton	18,900	N/A	4-14
M915A2	Trk, Tractor, Line Haul, 25-ton	18,680	N/A	4-14
M916	Trk, Tractor, LET	24,000	N/A	4-14
M916A1	Trk, Tractor, LET	27,740	N/A	4-14
M917	Trk, Dump, 20-ton	34,080	74,080	4-15
M918	Trk, Bituminous, 22-1/2-ton	29,839	74,839	4-15
M919	Trk, Concrete, Mixer, 22-1/2-ton	37,540	82,540	4-15
M920	Trk, Tractor, MET 20-ton	26,200	N/A	4-14

Table 4-1. Wheeled Vehicles (Lifting), continued.

Model	Item	Curb Weight (lb)	Gross Weight (lb)	Page
M923	Trk, Cargo, 5-ton	21,770	32,070	4-16
M923A1	Trk, Cargo, 5-ton, WWN	23,275	33,275	4-16
M923A2	Trk, Cargo, 5-ton, WWN	20,930	30,930	4-16
M924	Trk, Cargo, 5-ton	21,370	31,370	4-16
M924A1	Trk, Cargo, 5-ton, WWN	23,175	33,175	4-16
M925	Trk, Cargo, 5-ton	22,750	32,750	4-16
M925A1	Trk, Cargo, 5-ton, WWN	23,275	33,275	4-16
M925A2	Trk, Cargo, 5-ton, WWN	22,030	32,030	4-16
M926	Trk, Cargo, 5-ton	22,470	32,470	4-16
M926A1	Trk, Cargo, 5-ton, WWN	23,175	33,175	4-16
M927A1	Trk, Cargo, 5-ton, WWN	26,135	36,135	4-16
M927A2	Trk, Cargo, 5-ton, WWN	23,790	33,790	4-16
M928A1	Trk, Cargo, 5-ton, WWN	26,135	36,135	4-16
M928A2	Trk, Cargo, 5-ton, WWN	24,890	34,890	4-16
M929	Trk, Dump, 5-ton	23,990	33,990	4-16
M929A1	Trk, Dump, 5-ton, WWN	26,165	36,165	4-16
M930	Trk, Dump, 5-ton	25,090	35,090	4-16
M930A1	Trk, Dump, 5-ton, WWN	26,165	36,165	4-16
M931	Trk, Tractor, 5-ton	20,510	N/A	4-16
M931A1	Trk, Tractor, 5-ton, WWN	22,240	N/A	4-16
M931A2	Trk, Tractor, 5-ton, WWN	19,895	N/A	4-16
M932	Trk, Tractor, 5-ton, WWN	21,150	N/A	4-16
M932A2	Trk, Tractor, 5-ton, WWN	20,995	N/A	4-16
M934	Trk, Van, Expansible, 5-ton	28,440	38,440	4-17
M934A1	Trk, Van, Expansible, 5-ton	29,280	34,280	4-17

Table 4-1. Wheeled Vehicles (Lifting), continued.

Model	Item	Curb Weight (lb)	Gross Weight (lb)	Page
M935A1	Trk, Van, Expansible, 5-ton	31,280	36,280	4-17
M936	Trk, Wrecker, 5-ton, WWN	37,600	N/A	4-17
M936A1	Trk, Wrecker, 5-ton, WWN	38,155	N/A	4-17
M966	Trk, Tow Missile, (HMMWV)	5,269	8,128	4-24
M977	Trk, Cargo, 10-ton	35,500	60,000	4-19
M978	Trk, Tank, Fuel (HEMTT)	34,920	60,000	4-20
M983	Trk, Tractor, 10-ton (HEMTT)	30,760	N/A	4-21
M984	Trk, Wrecker, 10-ton (HEMTT)	42,215	N/A	4-22
M984A1	Trk, Wrecker, 10-ton (HEMTT)	53,000	63,000	4-23
M985	Trk, Cargo, 10-ton (HEMTT)	38,271	60,000	4-19
M996	Trk, Amb, 2-litter (HMMWV)	5,800	8,600	4-26
M997	Trk, Amb, 1-1/4-ton (HMMWV)	5,800	8,600	4-26
M998	Trk, Utility, 3/4-ton (HMMWV)	7,400	7,700	4-24
M1008	Trk, Cargo, 1-1/4-ton (CUCV)	5,950	9,200	4-25
M1008A1	Trk, Utility, 1-1/4-ton (CUCV)	5,950	9,200	4-25
M1009	Trk, Utility, 1-1/4-ton (CUCV)	5,200	6,700	4-25

Table 4-1. Wheeled Vehicles (Lifting), continued.

Model	Item	Curb Weight (lb)	Gross Weight (lb)	Page
M1010	Trk, Amb, 1-1/4-ton (CUCV)	7,475	9,555	4-25
M1025	Trk, Armt, 1-1/4-ton (HMMWV)	6,104	8,200	4-24
M1026	Trk, Utility, 1-1/4-ton (HMMWV)	6,237	8,333	4-24
M1028	Trk, Cargo, 1-1/4-ton (CUCV)	5,750	9,350	4-25
M1028A2	Trk, Utility, 1-1/4-ton (CUCV)	6,120	10,120	4-25
M1035	Trk, Amb, 1-1/4-ton (HMMWV)	5,297	7,900	4-26
M1037	Trk, Cargo, 1-1/4-ton (HMMWV)	5,484	8,660	4-26
M1038	Trk, Utility, 1-1/4-ton (HMMWV)	5,591	7,833	4-24
M1042	Trk, Shelter, 1-1/4-ton (HMMWV)	5,617	8,660	4-26
M1043	Trk, Armt, 1-1/4-ton (HMMWV)	7,673	8,473	4-24
M1044	Trk, Armt, 1-1/4-ton (HMMWV)	7,803	8,600	4-24
M1045	Trk, TOW, 1-1/4-ton (HMMWV)	7,549	8,149	4-24
M1046	Trk, TOW, 1-1/4-ton (HMMWV)	7,679	8,729	4-24
M1070	HET Tractor	40,999	N/A	4-33
M1074	PLS Truck w/flatrack	55,010	88,000	4-29
M1075	PLS Truck w/flatrack	49,520	82,960	4-29
M1076	PLS Trailer w/flatrack	16,530	49,520	4-31
M1077	PLS Flatrack	3,190	36,620	4-32

Table 4-1. Wheeled Vehicles (Lifting), continued.

Model	Item	Curb Weight (lb)	Gross Weight (lb)	Page
M1010	Trk, Amb, 1-1/4-ton (CUCV)	7,475	9,555	4-25
M1025	Trk, Armt, 1-1/4-ton (HMMWV)	6,104	8,200	4-24
M1026	Trk, Utility, 1-1/4-ton (HMMWV)	6,237	8,333	4-24
M1028	Trk, Cargo, 1-1/4-ton (CUCV)	5,750	9,350	4-25
M1028A2	Trk, Utility, 1-1/4-ton (CUCV)	6,120	10,120	4-25
M1035	Trk, Amb, 1-1/4-ton (HMMWV)	5,297	7,900	4-26
M1037	Trk, Cargo, 1-1/4-ton (HMMWV)	5,484	8,660	4-26
M1038	Trk, Utility, 1-1/4-ton (HMMWV)	5,591	7,833	4-24
M1042	Trk, Shelter, 1-1/4-ton (HMMWV)	5,617	8,660	4-26
M1043	Trk, Armt, 1-1/4-ton (HMMWV)	7,673	8,473	4-24
M1044	Trk, Armt, 1-1/4-ton (HMMWV)	7,803	8,600	4-24
M1045	Trk, TOW, 1-1/4-ton (HMMWV)	7,549	8,149	4-24
M1046	Trk, TOW, 1-1/4-ton (HMMWV)	7,679	8,729	4-24
M1070	HET Tractor	40,999	N/A	4-33
M1074	PLS Truck w/flatrack	55,010	88,000	4-29
M1075	PLS Truck w/flatrack	49,520	82,960	4-29
M1076	PLS Trailer w/flatrack	16,530	49,520	4-31
M1077	PLS Flatrack	3,190	36,620	4-32

Table 4-1. Wheeled Vehicles (Lifting), continued.

Model	Item	Curb Weight (lb)	Gross Weight (lb)	Page
M1078	LMTV, Cargo	18,137	25,273	4-35
M1079	LMTV, Van	19,879	26,076	4-35
M1081	LMTV, Cargo, A/D	19,379	25,975	4-35
M1083	MTV, Cargo	21,473	33,463	4-35
M1084	MTV, Cargo, W/MHE	24,510	36,152	4-35
M1085	MTV, Long Cargo	22,001	34,738	4-35
M1086	MTV, Long Cargo, W/MHE	26,076	37,422	4-35
M1088	MTV, Tractor	21,184	N/A	4-34
M1089	MTV, Wrecker	36,325	N/A	4-34
M1090	MTV, Dump	23,082	34,986	4-35
M1093	MTV, Cargo, A/D	22,653	34,273	4-35
M1094	MTV, Dump, A/D	24,296	35,503	4-35
M1097	HHV, HMMWV Heavy Variant	5,600	10,001	4-26
MT250	Crane, Truck-Mounted, 25-ton	65,800	N/A	4-27
MT300	Crane, Truck-Mounted, 30-ton	69,910	N/A	4-27
MW24C	Loader, Scoop, Wheel	26,540	N/A	4-8
RTCH	Rough Terrain Container Handler	118,040	N/A	4-9
7-1/2-ton	Crane, Rough Terrain	24,230	N/A	4-10

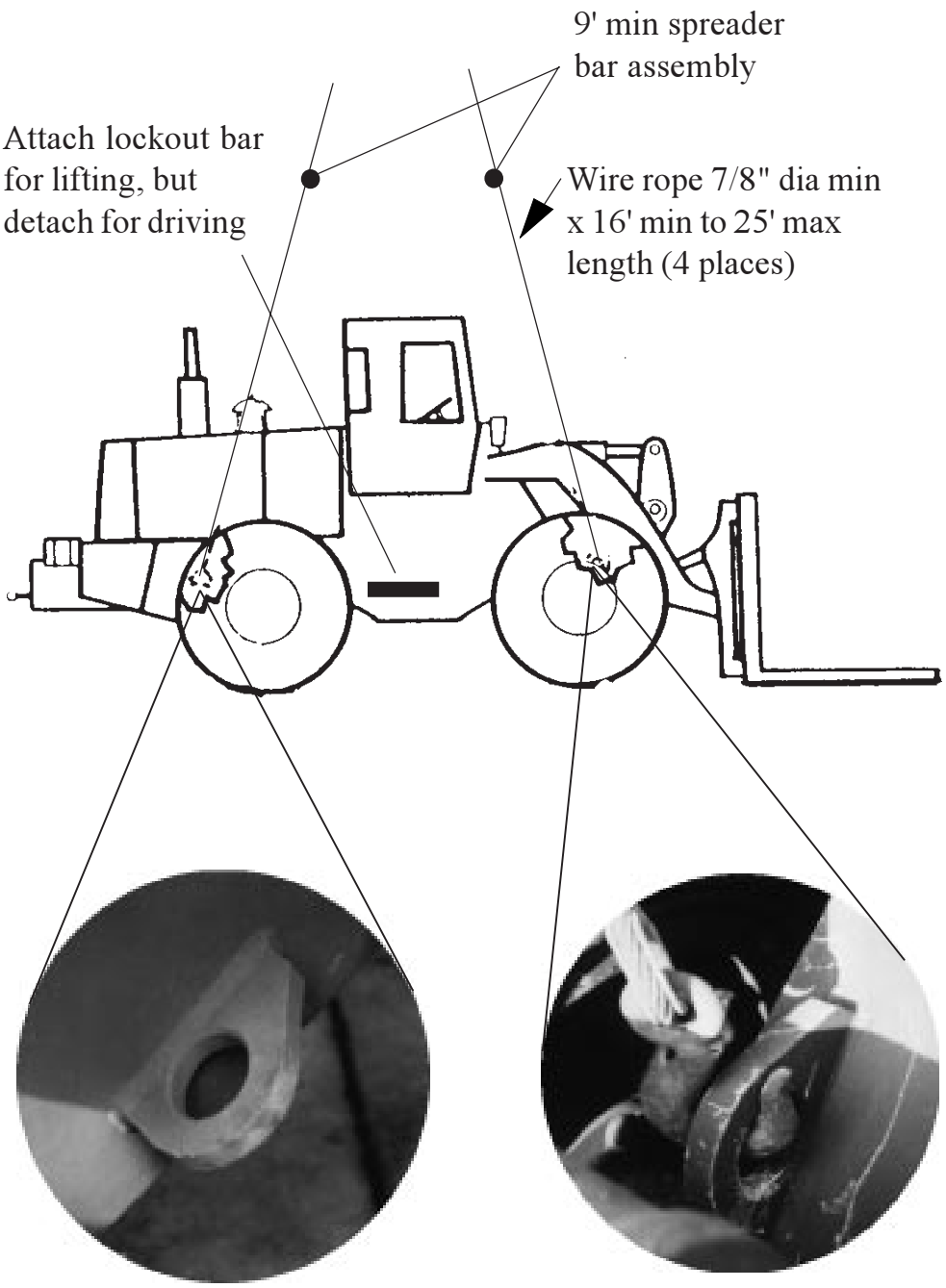

Other similar lifts: MW24C

M10A, 10,000-pound rough terrain forklift truck.

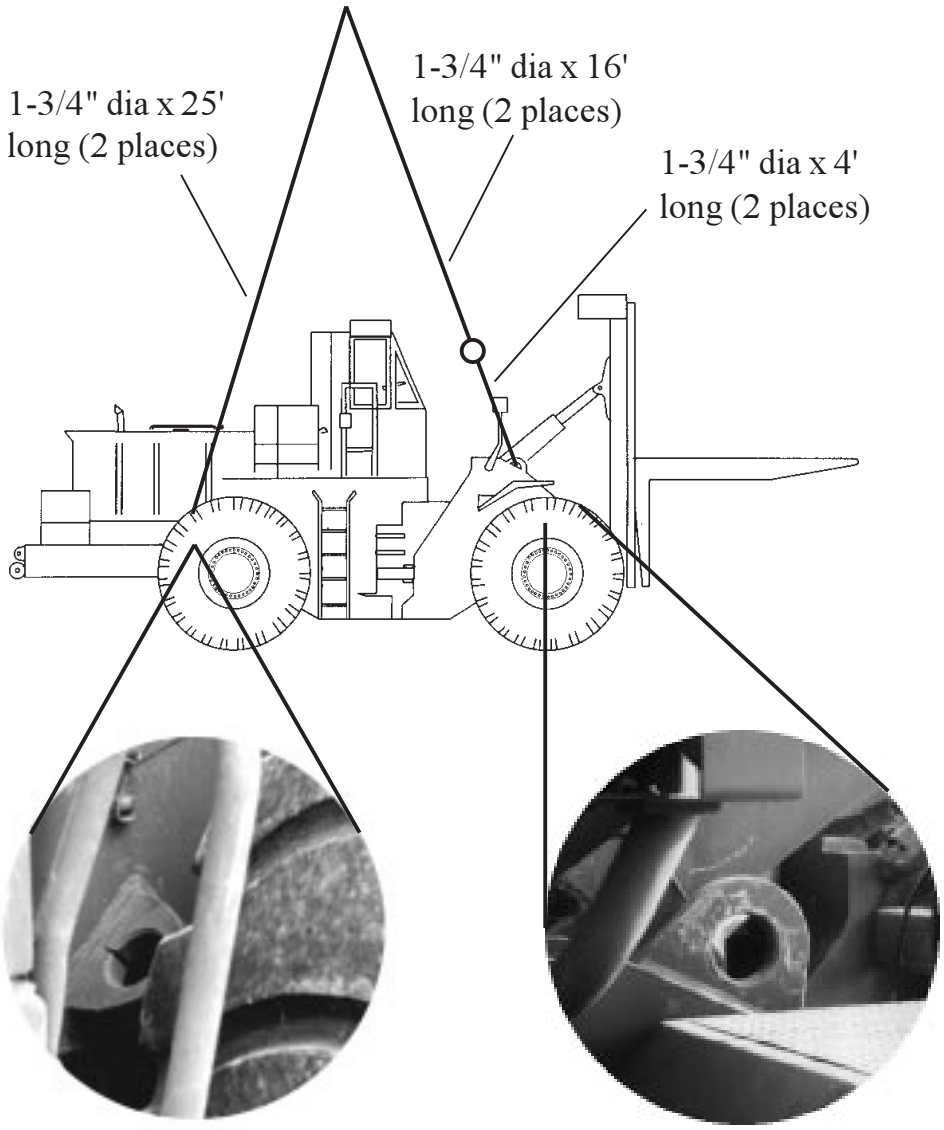

NOTE
Attach lockout bar for lifting, but detach for driving.

Other similar lifts: None

Rough terrain container handler (RTCH), 50,000-pound.

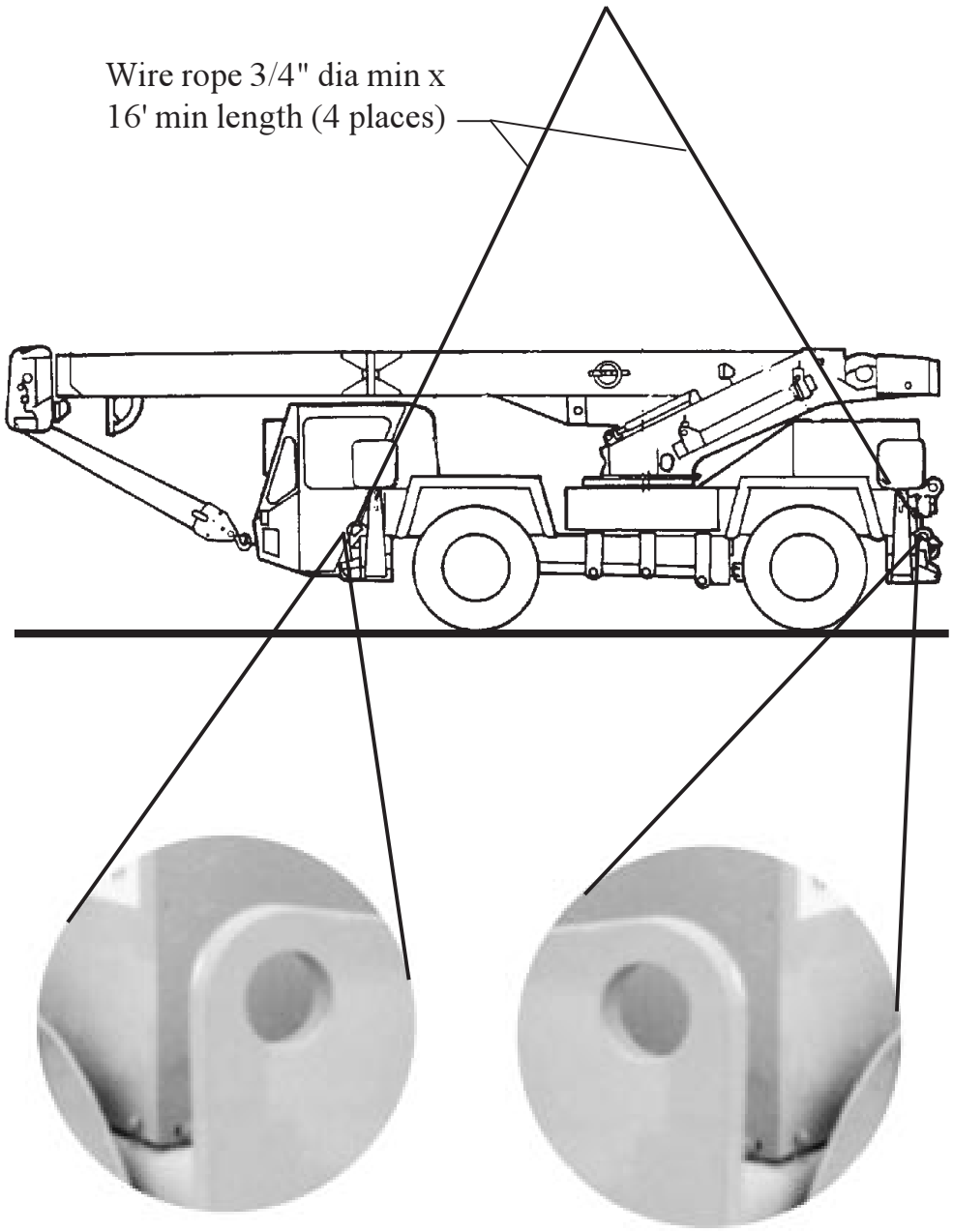

Other similar lifts: None

Crane, 7-1/2-ton, rough terrain, Koehring.

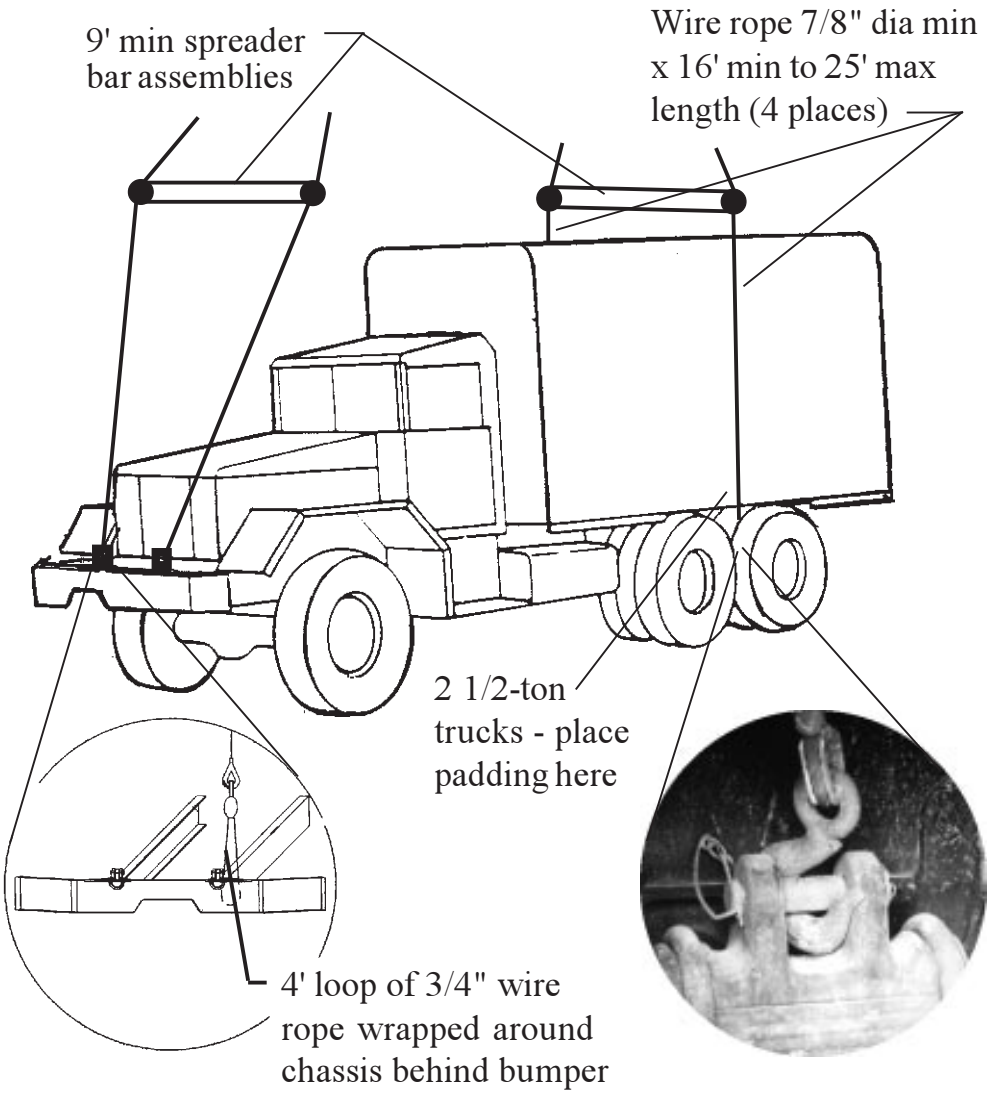

NOTE
Refer to page 4-18 for alternate method when lifting pin is missing.

WARNING

Do not use truck's own shackles for lifting.

Other similar lifts: M35A1/A2, M49A2C, M50A3, M51A2, M62, M63, M109A3, M246A2, M275A2, M342A2, M813A1, M814, M815, M816, M817, M819, M821

M813, truck, cargo, 5-ton.

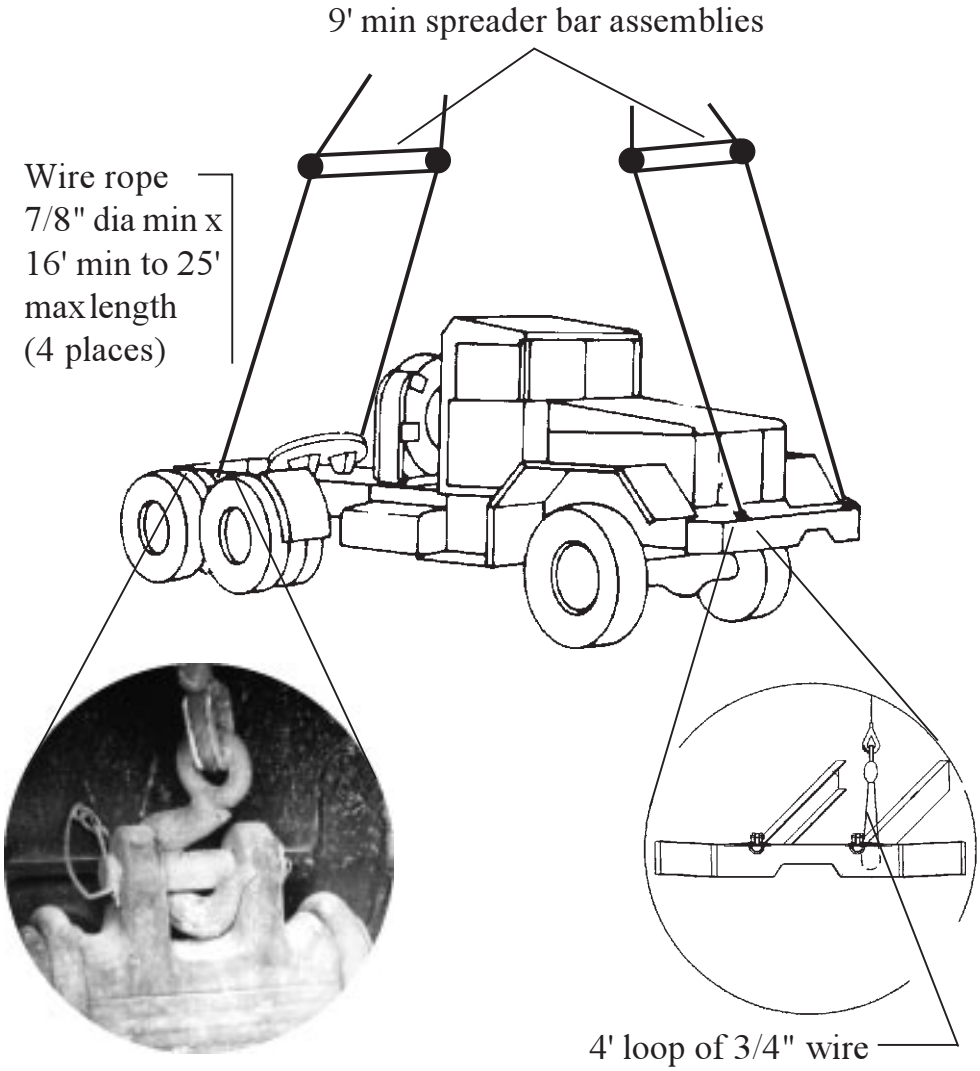

NOTE
Refer to page 4-18 for alternate method when lifting pin is missing.

WARNING

Do not use truck's own shackles for lifting.

Other similar lifts: M52, M543A2

M818, truck, tractor, 5-ton.

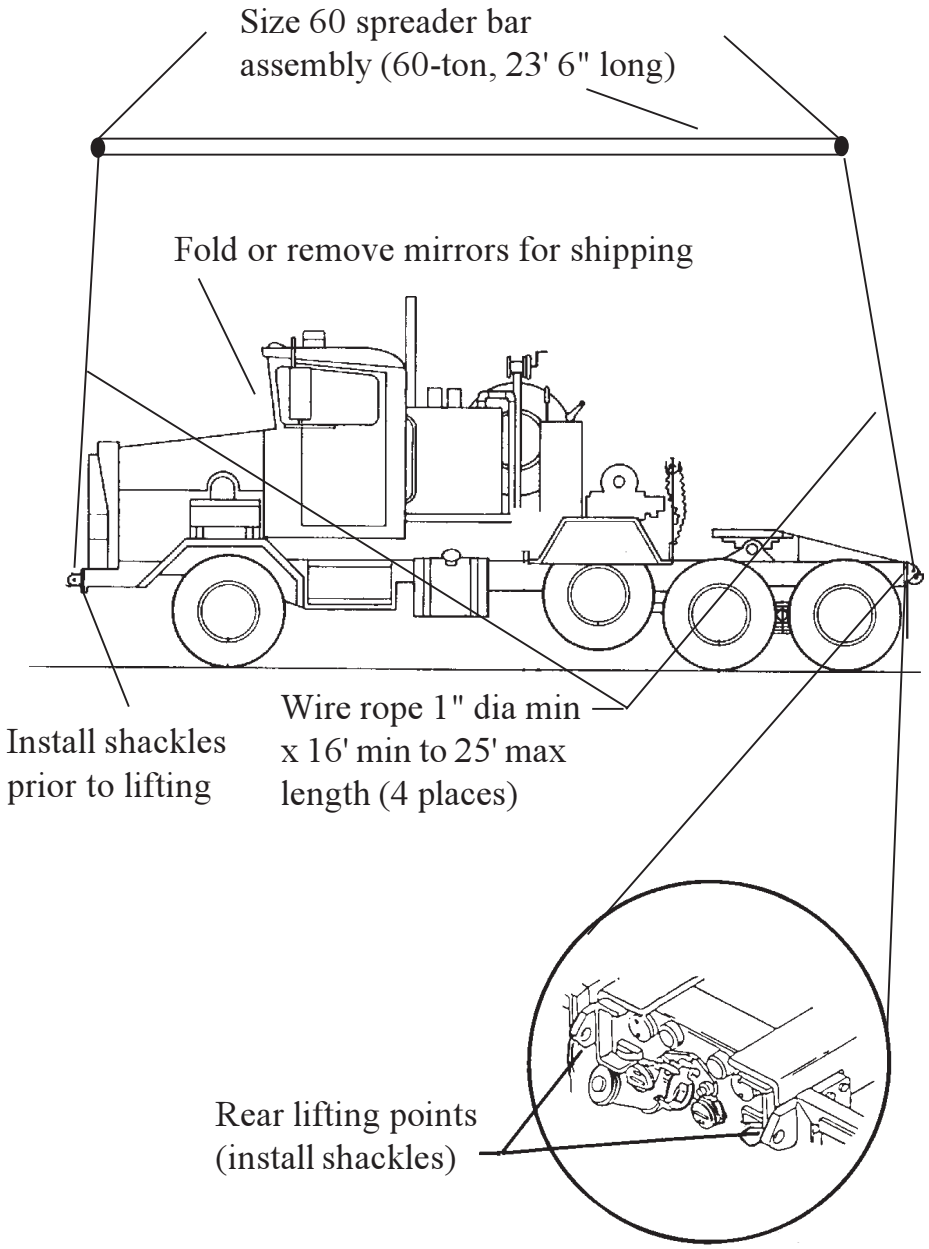

Other similar lifts: None

M911, truck, tractor, HET, 22-1/2-ton.

Wire rope 3/4" dia min x 16' min to 25' max length (4 places)

Size 60A spreader bar assembly

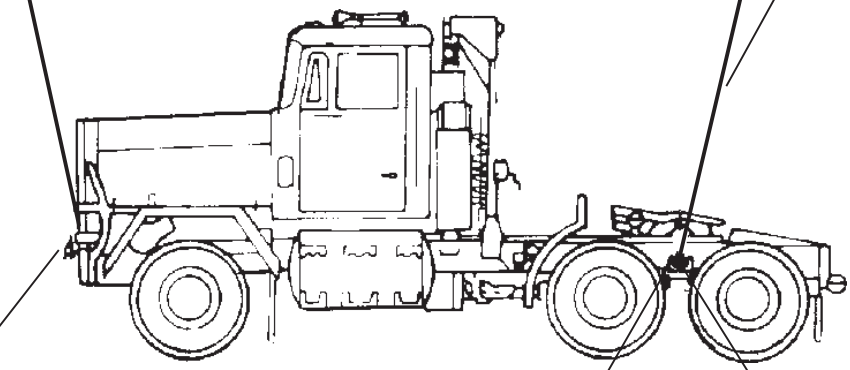

Front shackles may be used for lifting

This is a spare tire, not a pusher axle

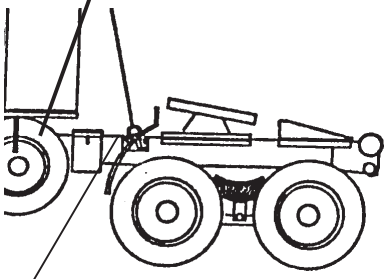

Lifting provisions on M915A2 and M916A1 are located on chassis forward of rear duals

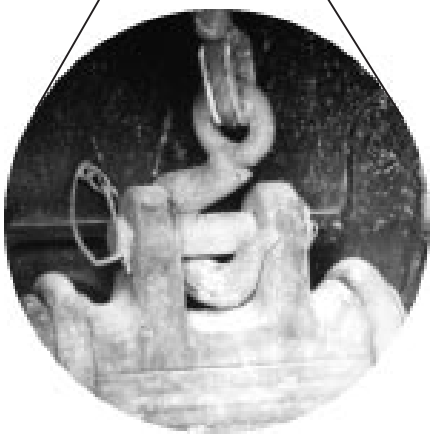

NOTE
Refer to page 4-18 for alternate method when lifting pin is missing.

Other similar lifts: M915, M915A2, M916, M916A1, M920

M915A1, truck, tractor, line haul, 14-ton.

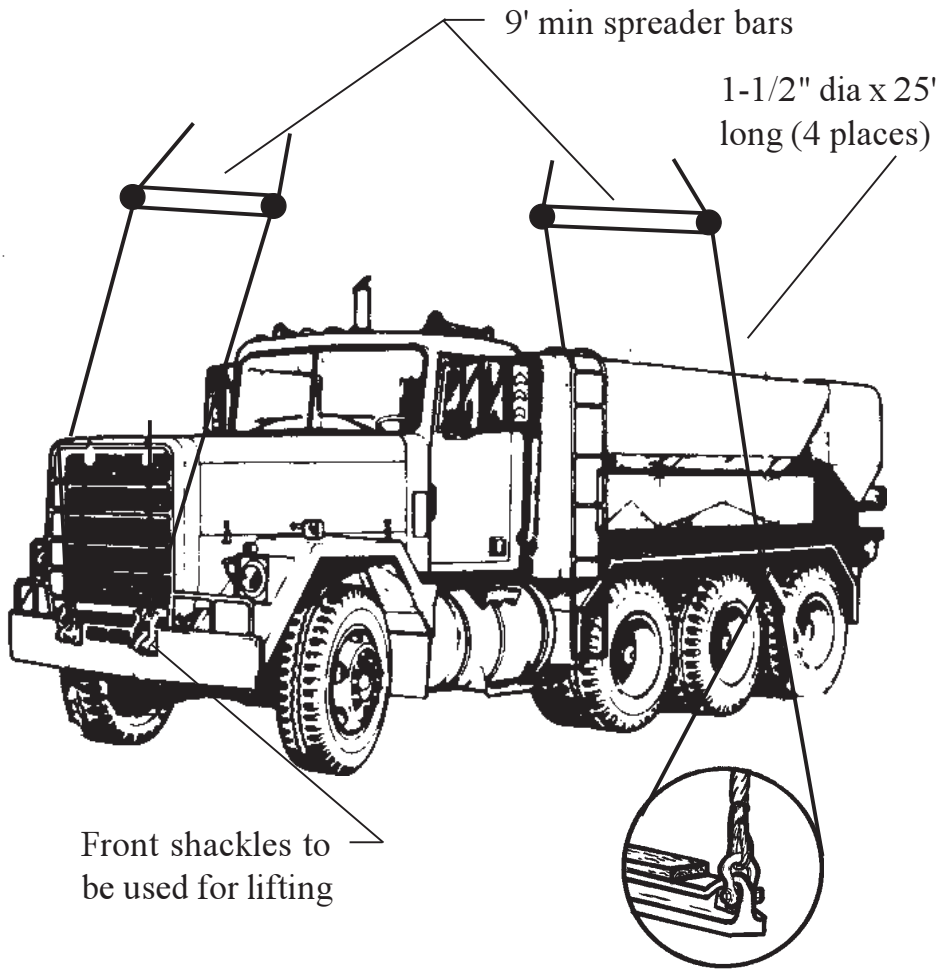

Detail A

Refer to page 4-18 for enlargement of detail A

Other similar lifts: M917, M918

M919, truck, concrete, mobile mixer, 22-1/2-ton.

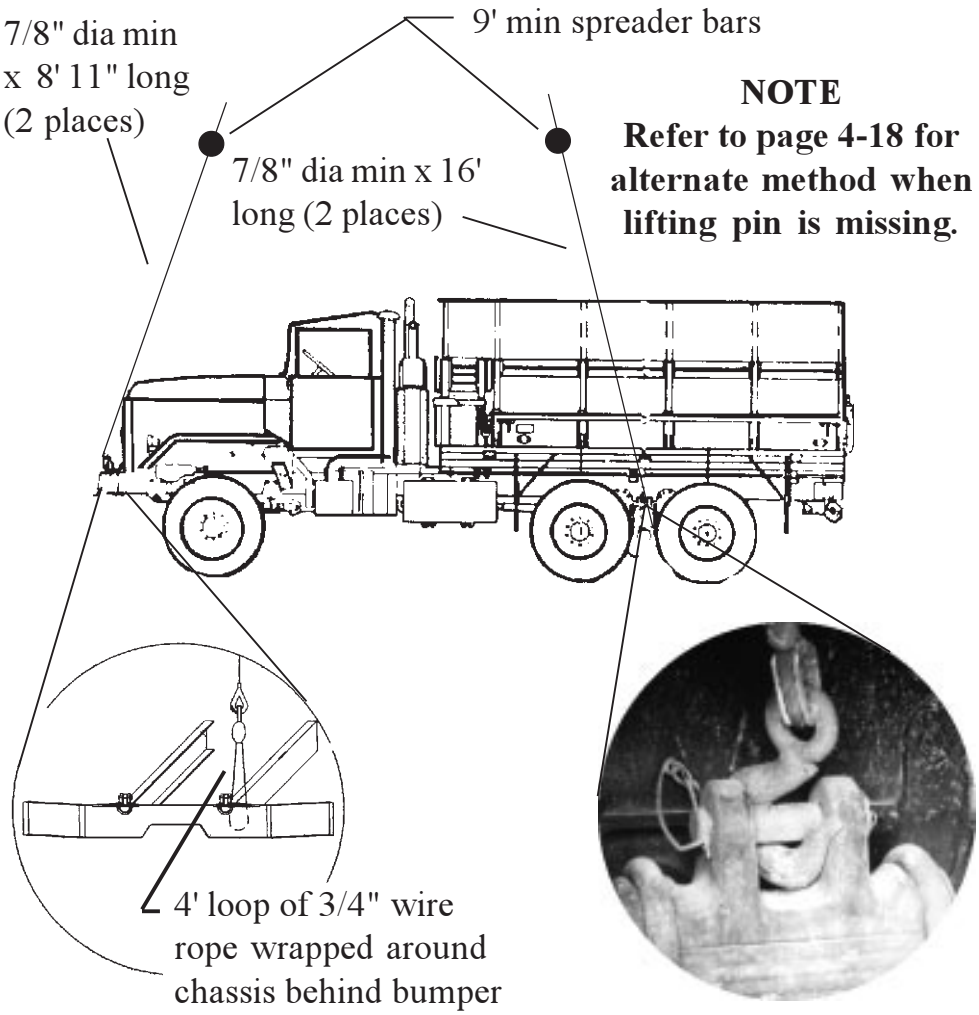

NOTE
Refer to page 4-18 for alternate method when lifting pin is missing.

WARNING

Do not use truck's own shackles for lifting (except A2 models).

CAUTION

This method cannot be used for lifting expansible vans (see page 4-17).

Other similar lifts: M939- and M939A1-series trucks (M923 through M931A2), M932, M932A2, M936, M936A1, M939A2

M924, truck, cargo, 5-ton.

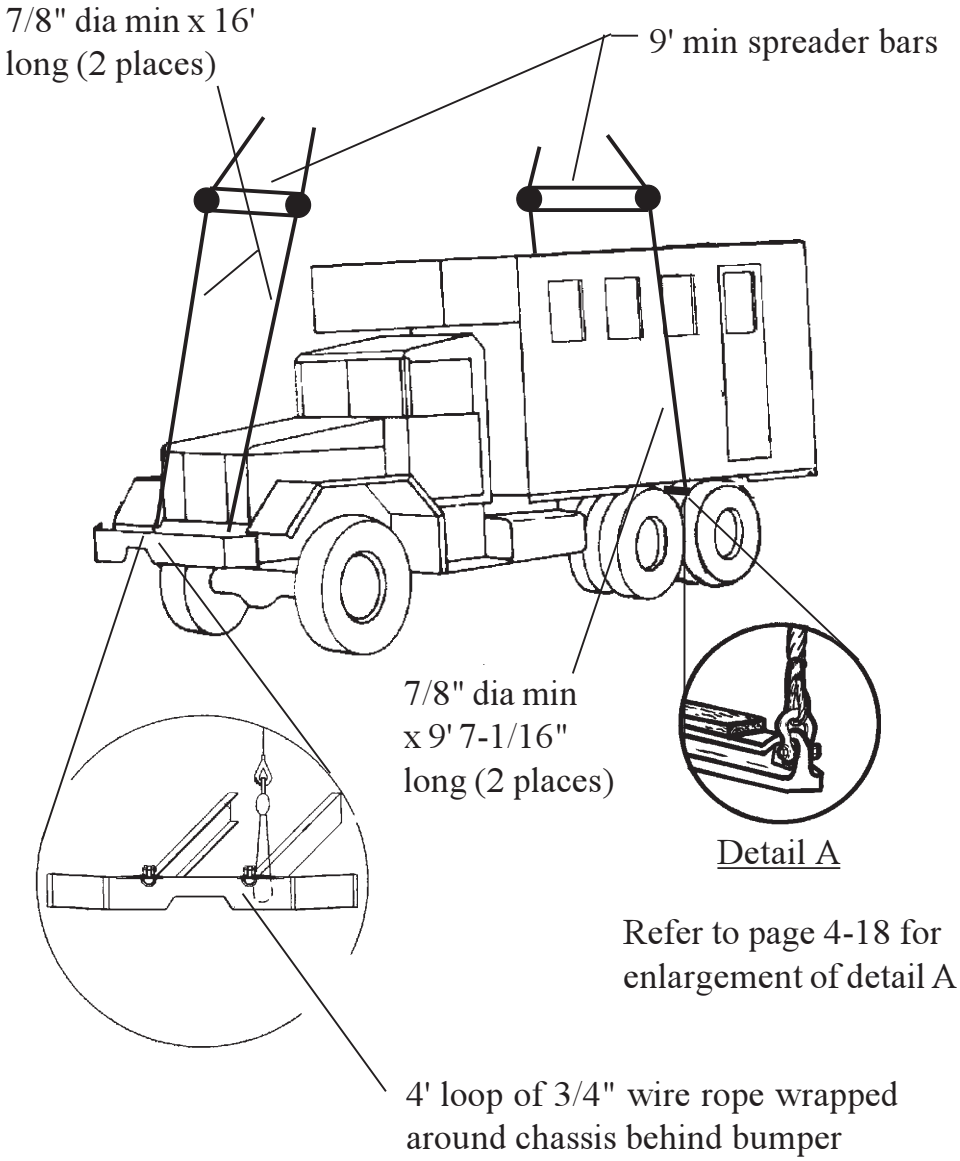

WARNING

Do not use truck's own shackles for lifting.

Other similar lifts: M291A1D, M820, M820A2, M934A1, M935A1, M936, M936A1

M934, truck, van, expansible, 5-ton.

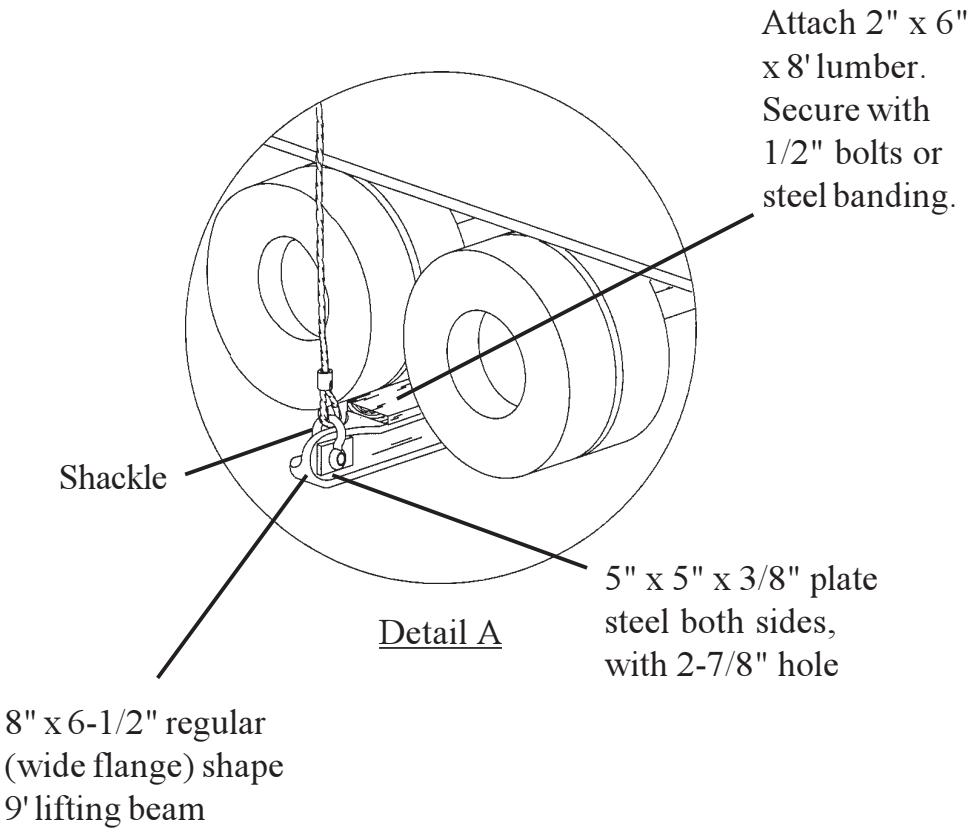

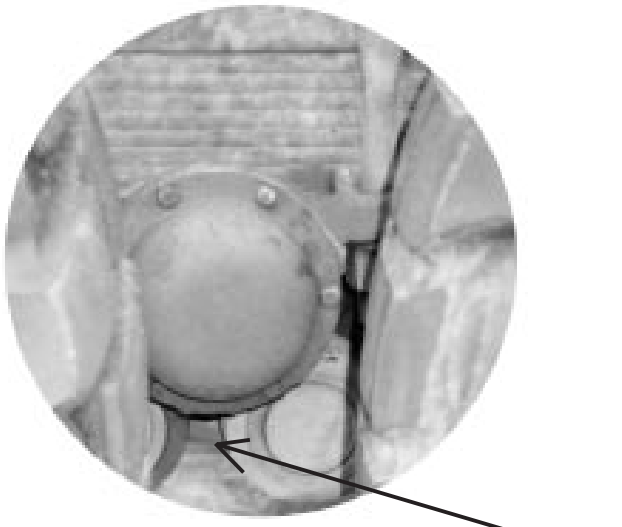

NOTE
If a lifting beam is not available, locate sling as indicated by the arrow (except expansible vans).

Detail A.

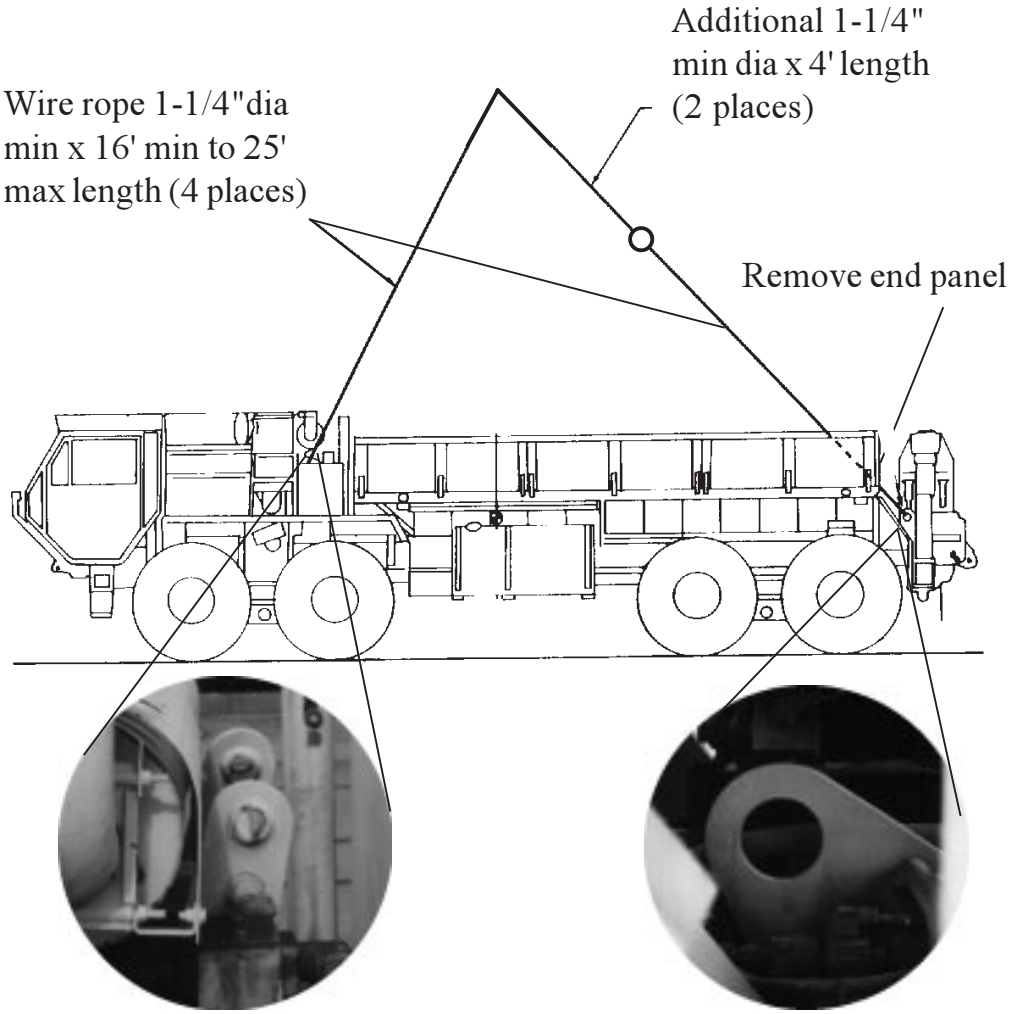

NOTE
Shackle furnished with HEMTT, or shackle, screw pin, pin dia 1-1/2" NSN 4030-00-169-9297 (4 places).

Other similar lifts: M985

M977, truck, cargo, 10-ton, 8 x 8 (HEMTT).

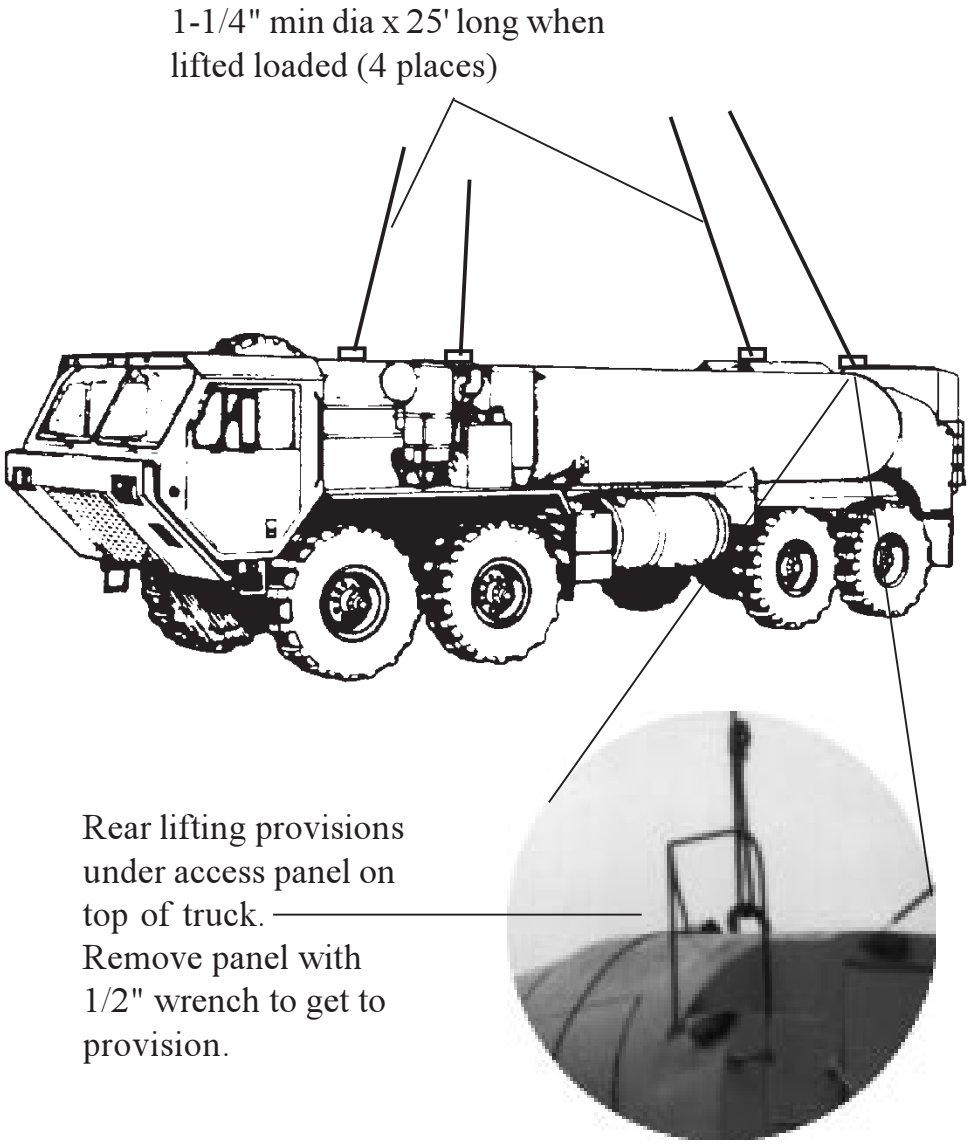

NOTES

30-ton spreader bar assembly may be used with 16-ft or 25-ft long slings.

Shackle furnished with HEMTT, or shackle, screw pin, pin dia 1-1/2" NSN 4030-00-169-9297 (4 places).

M978 truck, fuel-servicing, 10-ton, 8 x 8 (HEMTT).

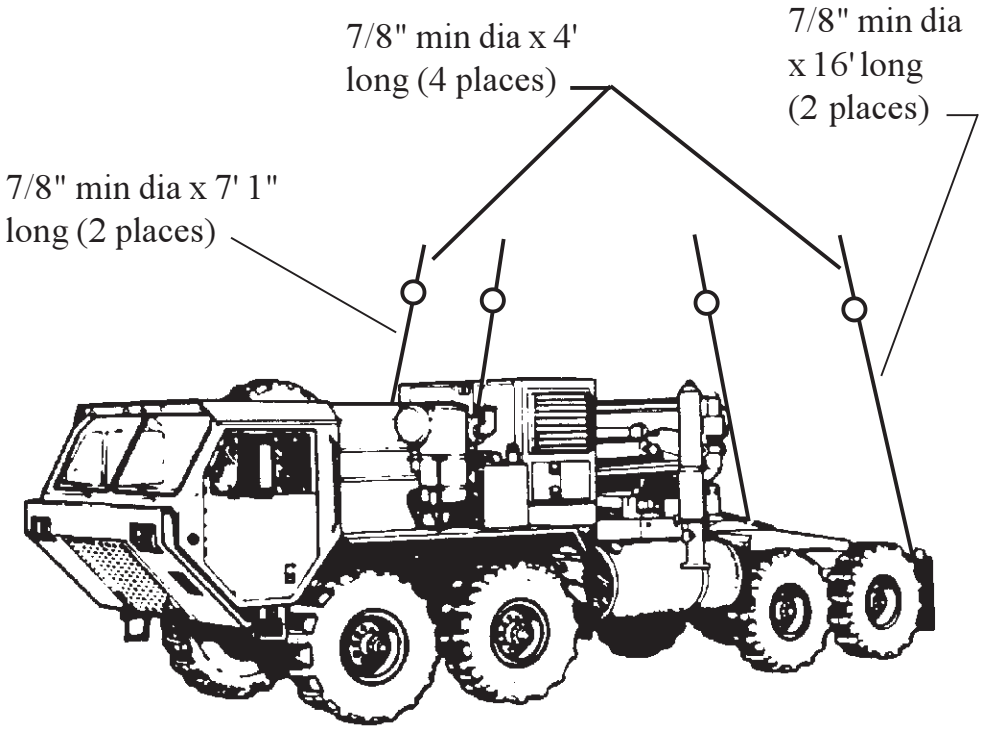

NOTES

**HEMTT with crane...use
two 25-ft slings on rear.**

**HEMTT without crane...use
two 16-ft slings on front.**

M983 truck, tractor, 10-ton, 8 x 8.

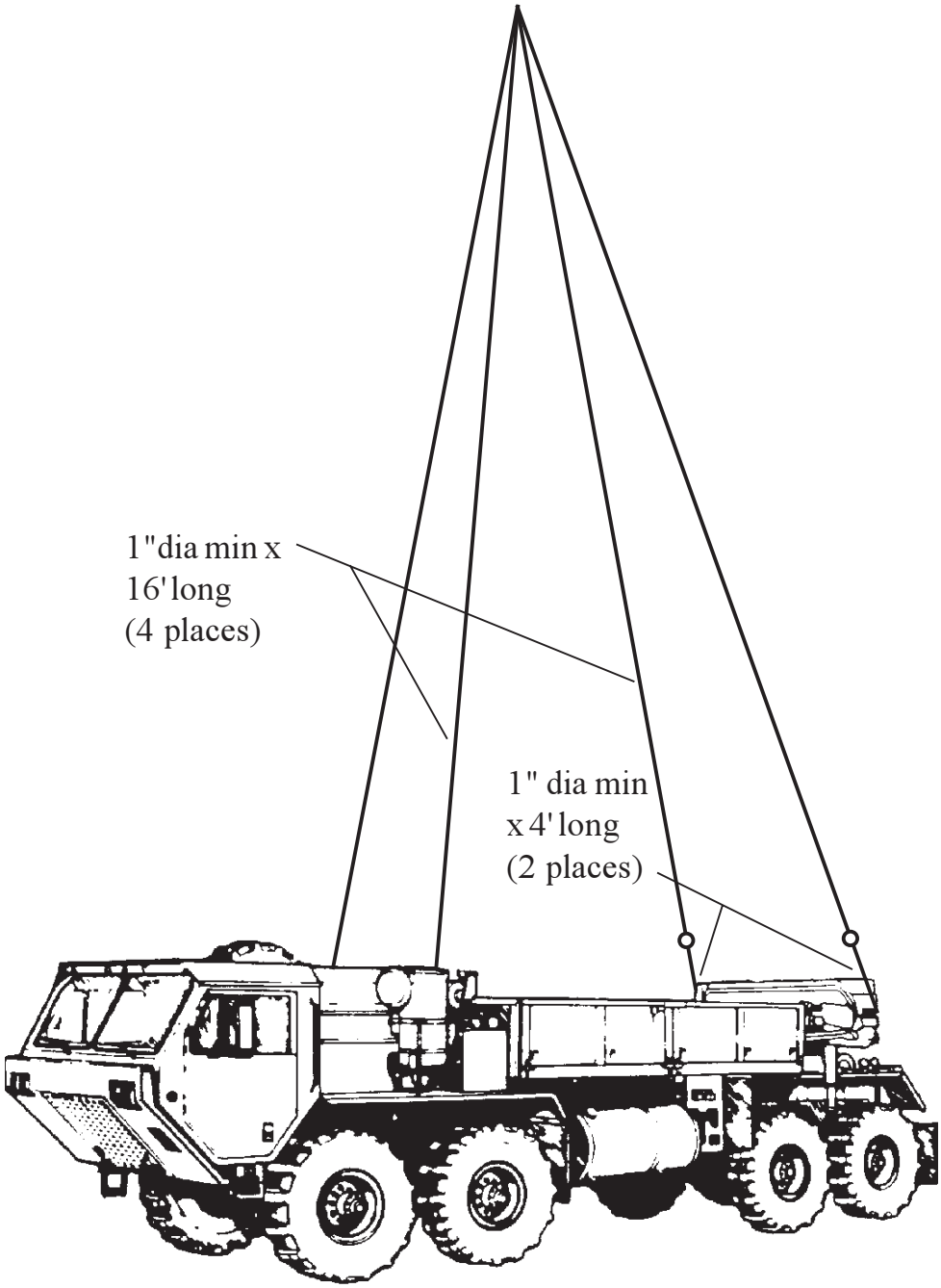

M984 truck, wrecker, 10-Ton, 8 x 8.

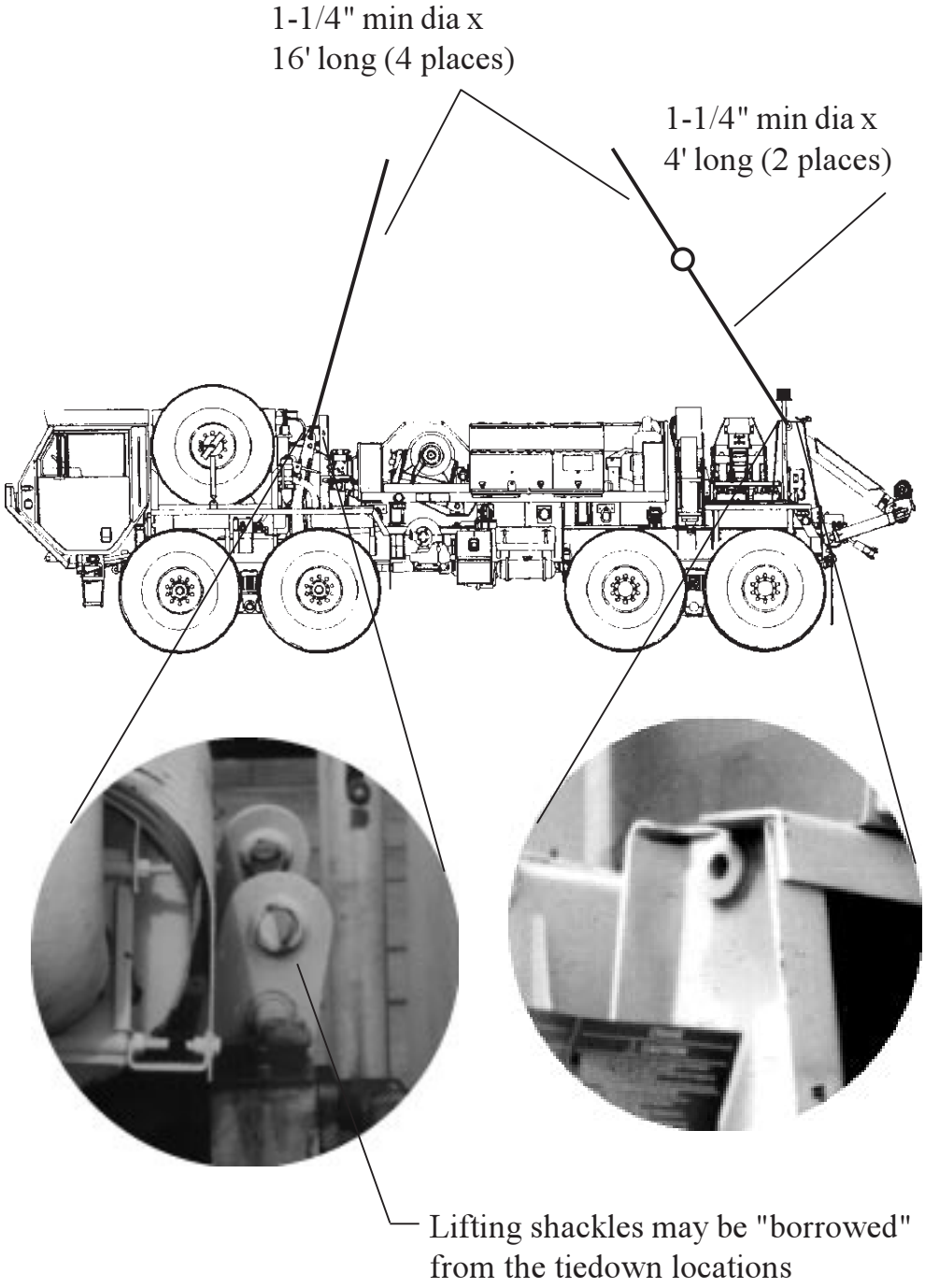

M984A1 truck, wrecker, 10-ton, 8 x 8.

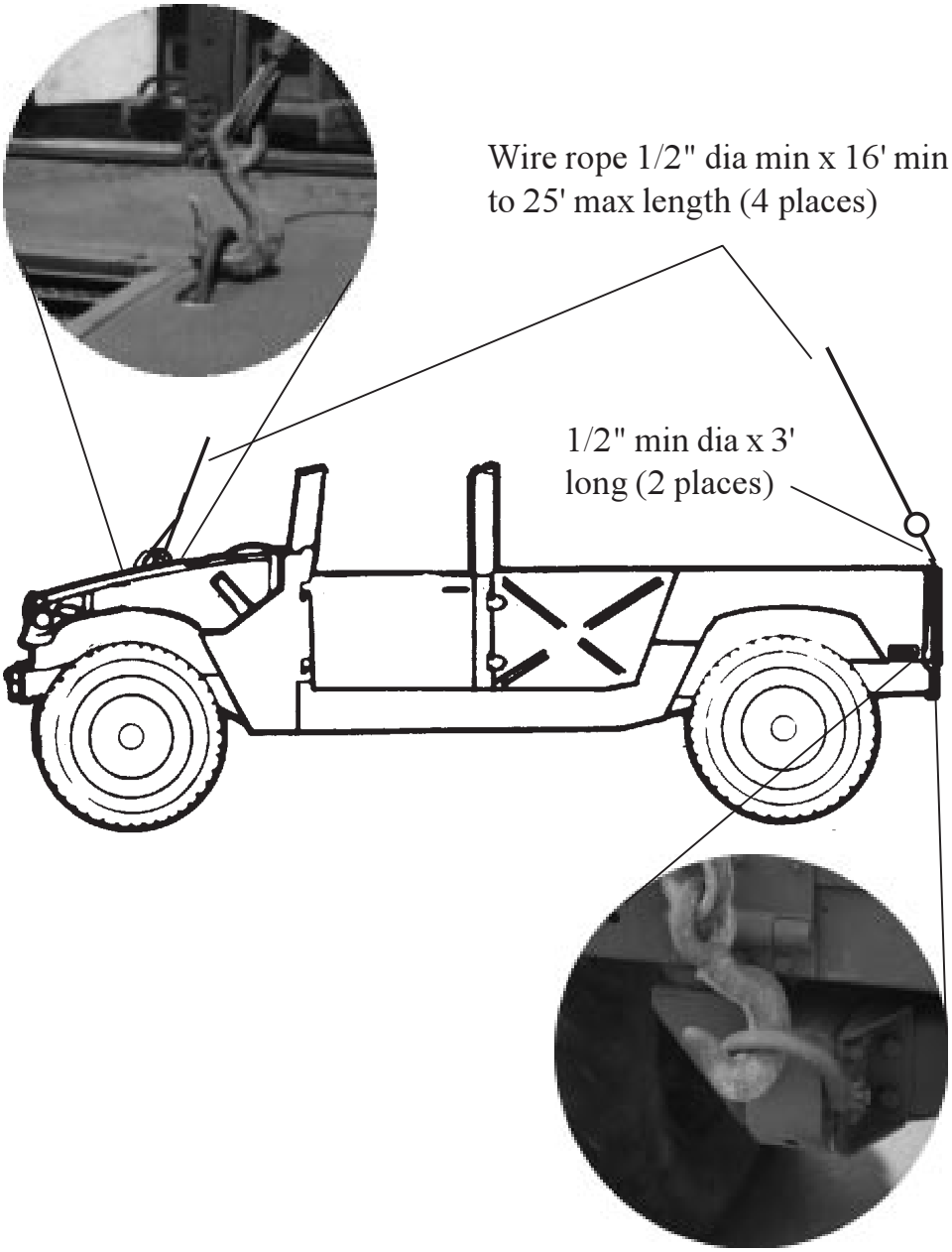

Other similar lifts: M966, M1025, M1026, M1038, M1043, M1044, M1045, M1046

M998, truck, utility, 1-1/4-ton (HMMWV).

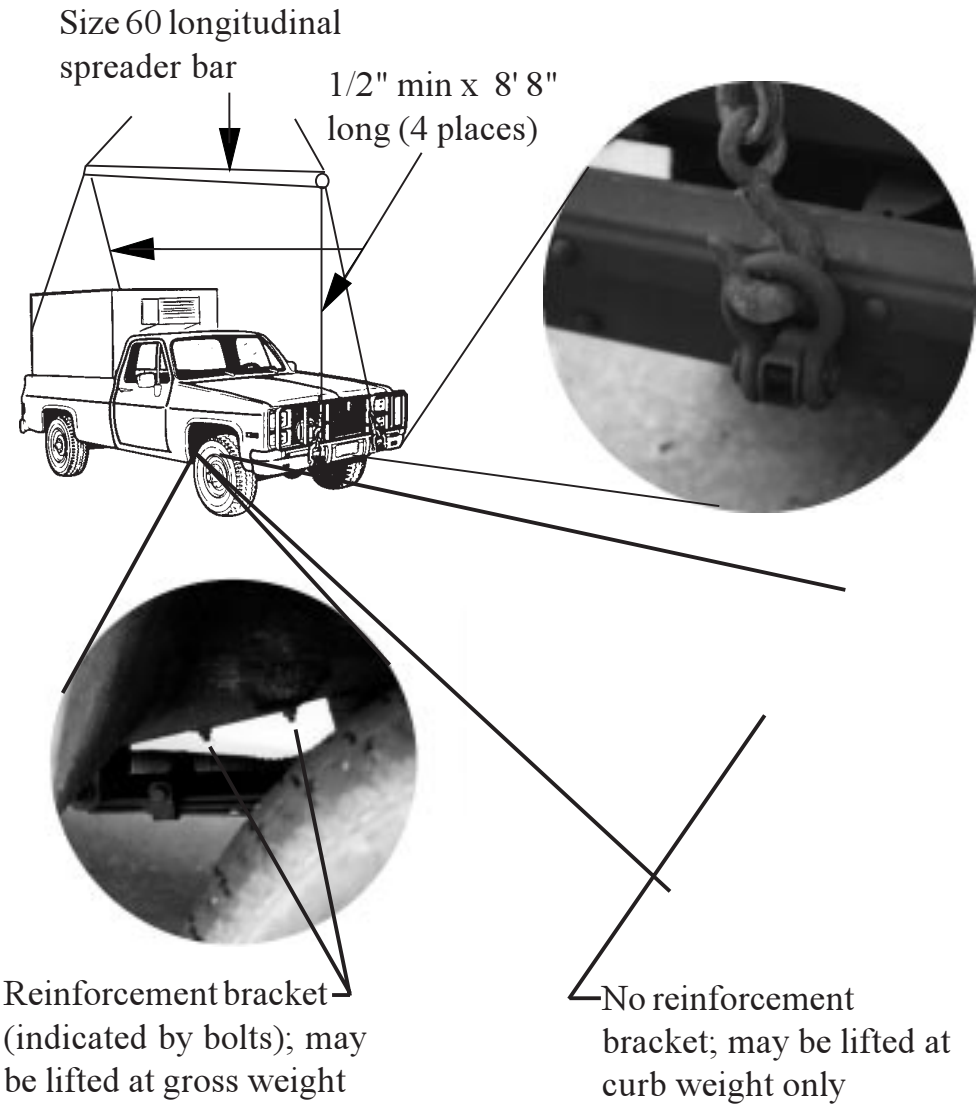

CAUTION

The rear slings for lifting CUCVs with shelters should be routed around the corners of the shelter and secured to prevent the vehicle from flipping over.

Other similar lifts: M1008A1, M1009, M1010, M1028, M1028A1, M1028A2

M1008, truck, cargo, 1-1/4-ton (CUCV).

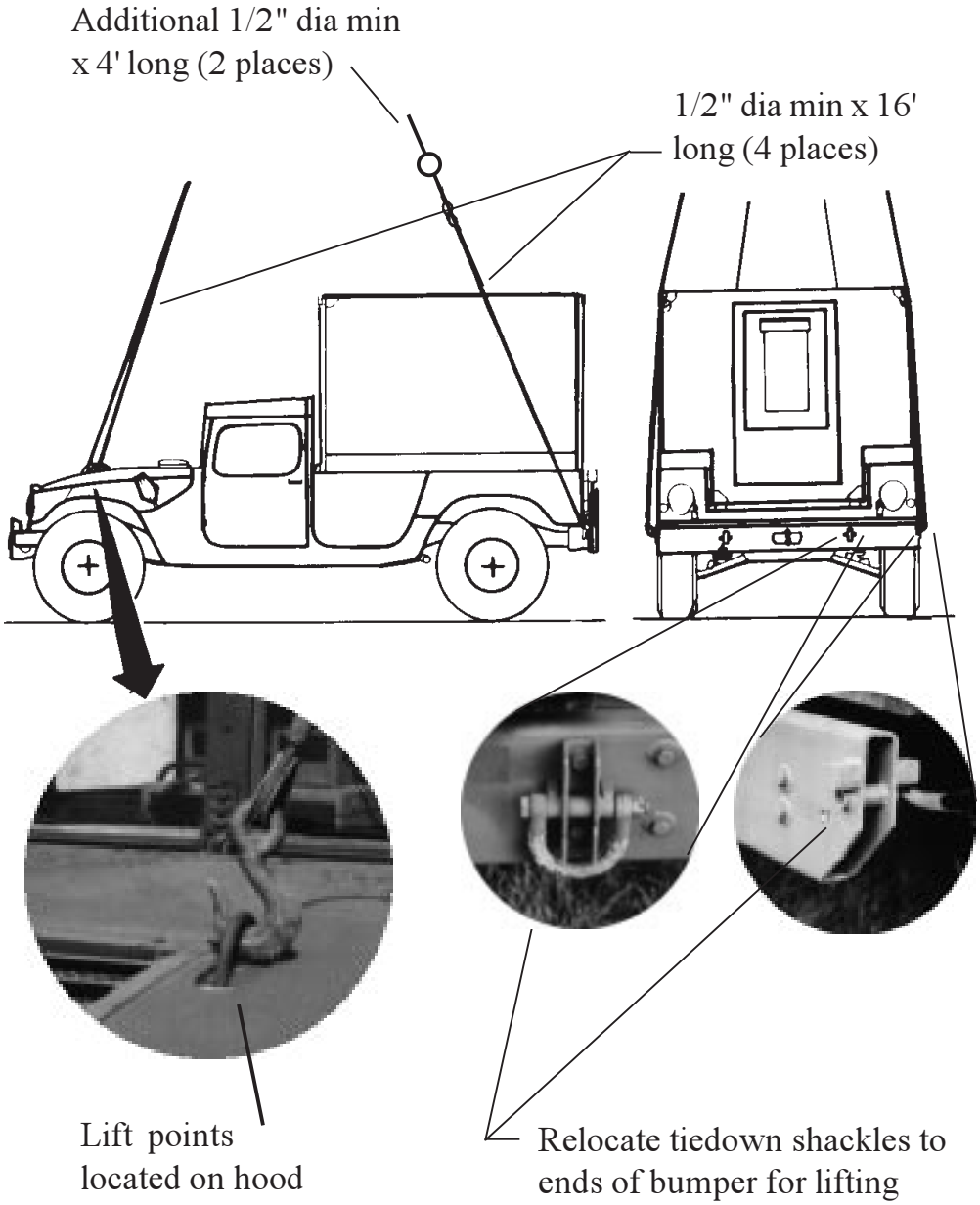

Other similar lifts: M996, M997, M1035, M1037, M1042

M1097, truck, shelter carrier, 1-1/4-ton (HHV).

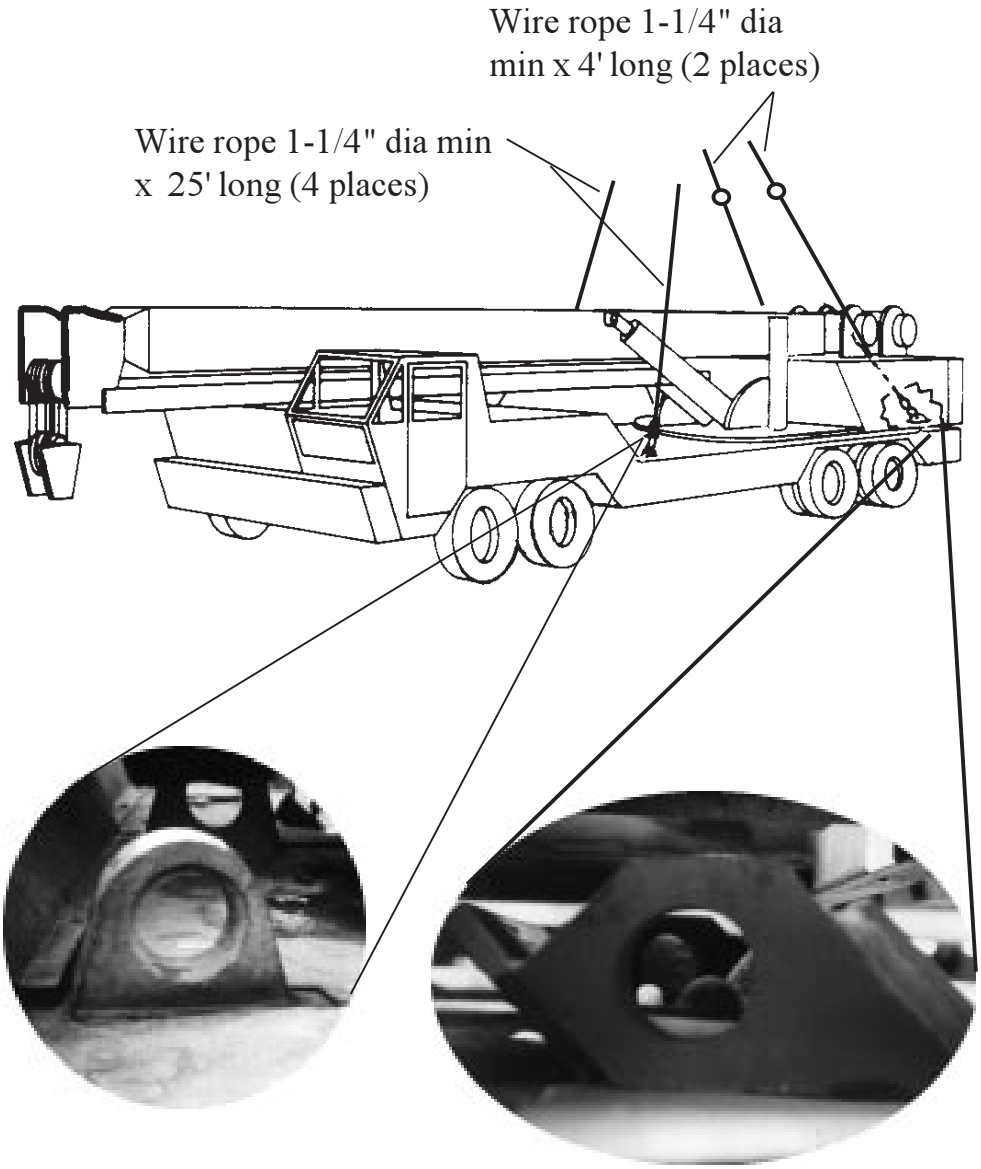

Other similar lifts: MT300

MT250, crane, truck-mounted, hydraulic, 25-ton.

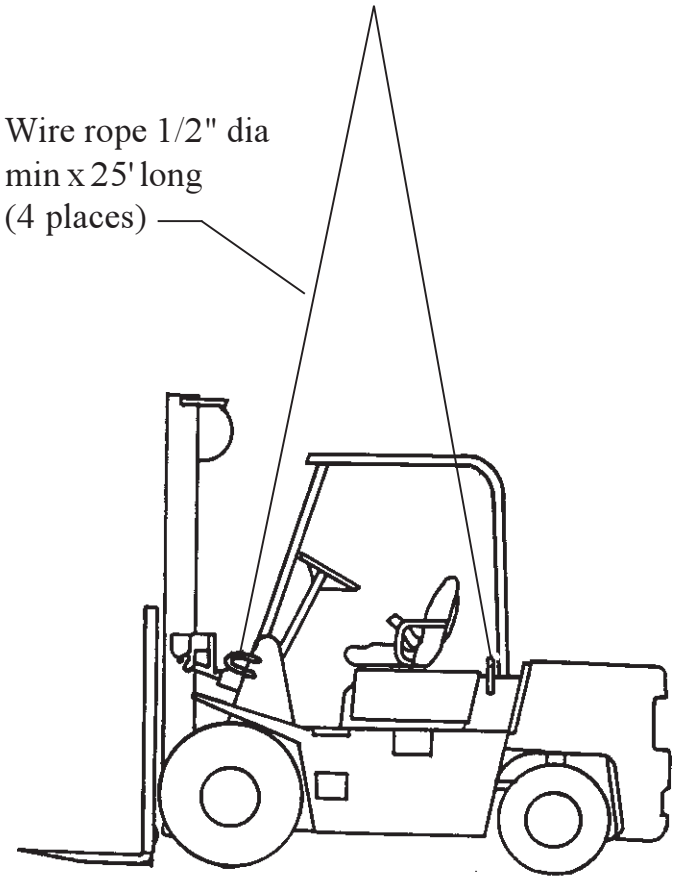

Other similar lifts: Hyster, Model H-40XL

Forklift 6K Hyster, Model H-60XL.

CAUTION

The vehicle, with flatrack, must be lifted using the <u>exact</u> sling lengths as shown below. Any deviation from this lift procedure could result in damage to the PLS lift provision or to the vehicle structure.

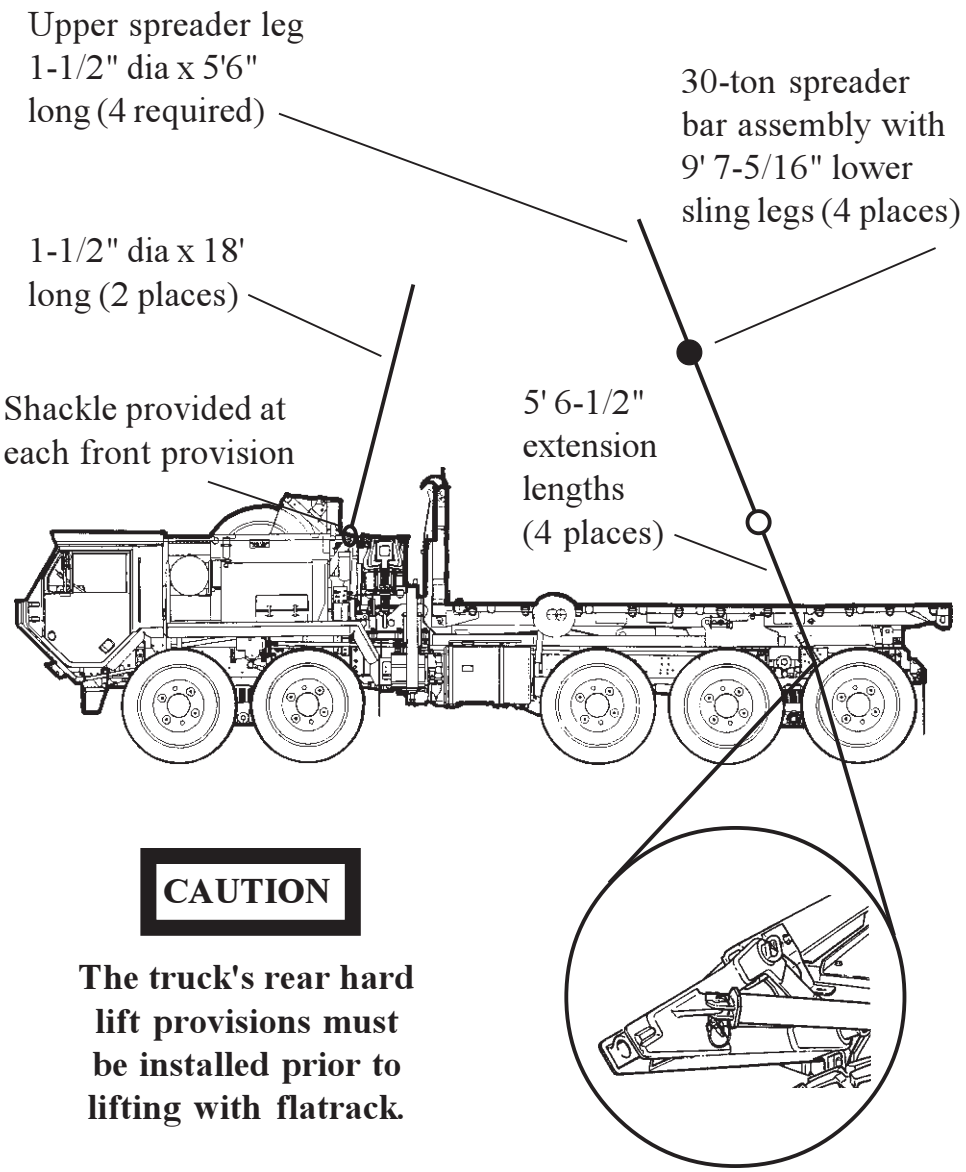

CAUTION

The truck's rear hard lift provisions must be installed prior to lifting with flatrack.

M1074/M1075, PLS truck with flatrack.

NOTE

Shippers must ensure that the flatrack is secured to the truck using the two securement pins prior to lifting to prevent the flatrack from shifting.

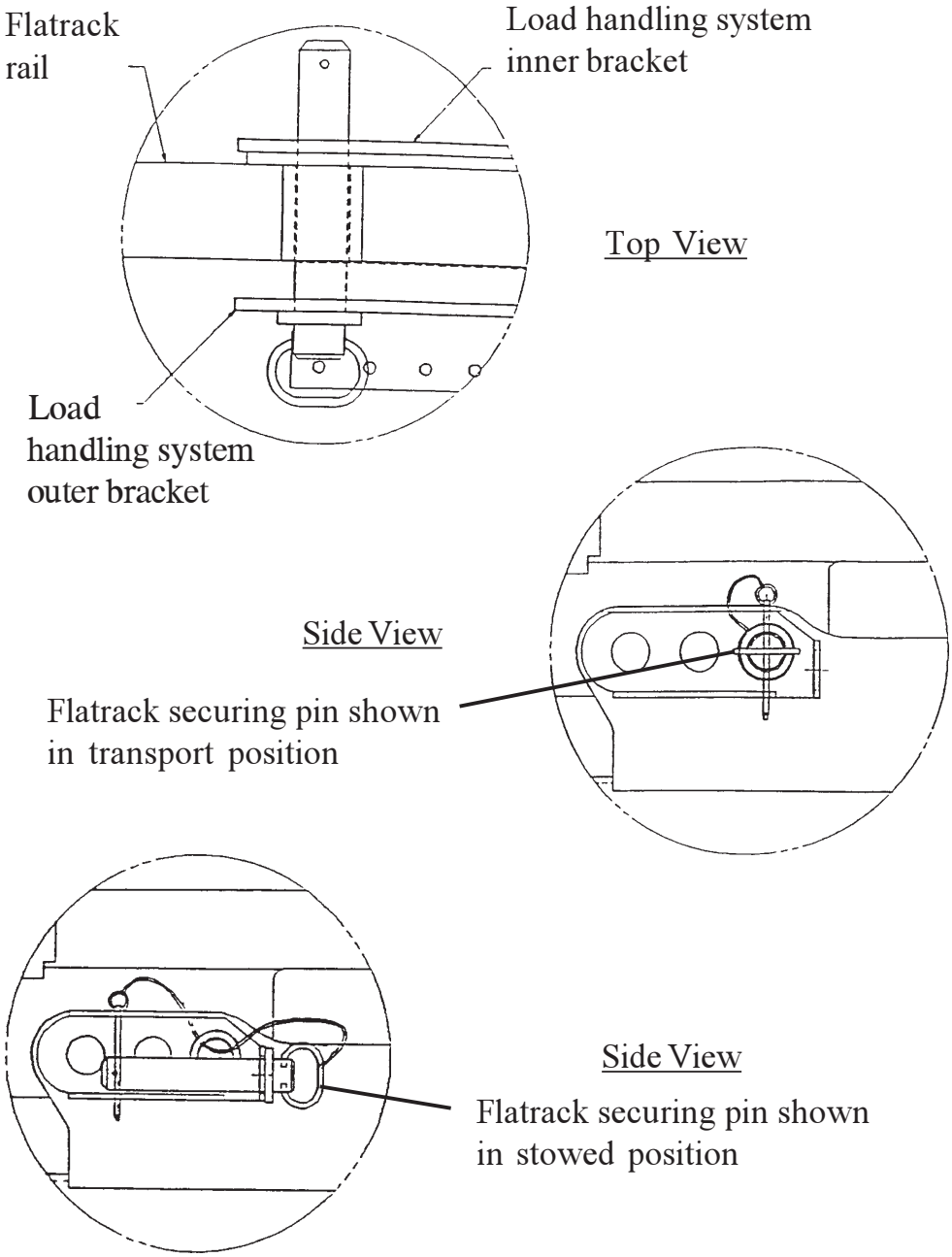

M1074/M1075, PLS truck with flatrack, continued.

NOTE
See previous page for securing pin figure.

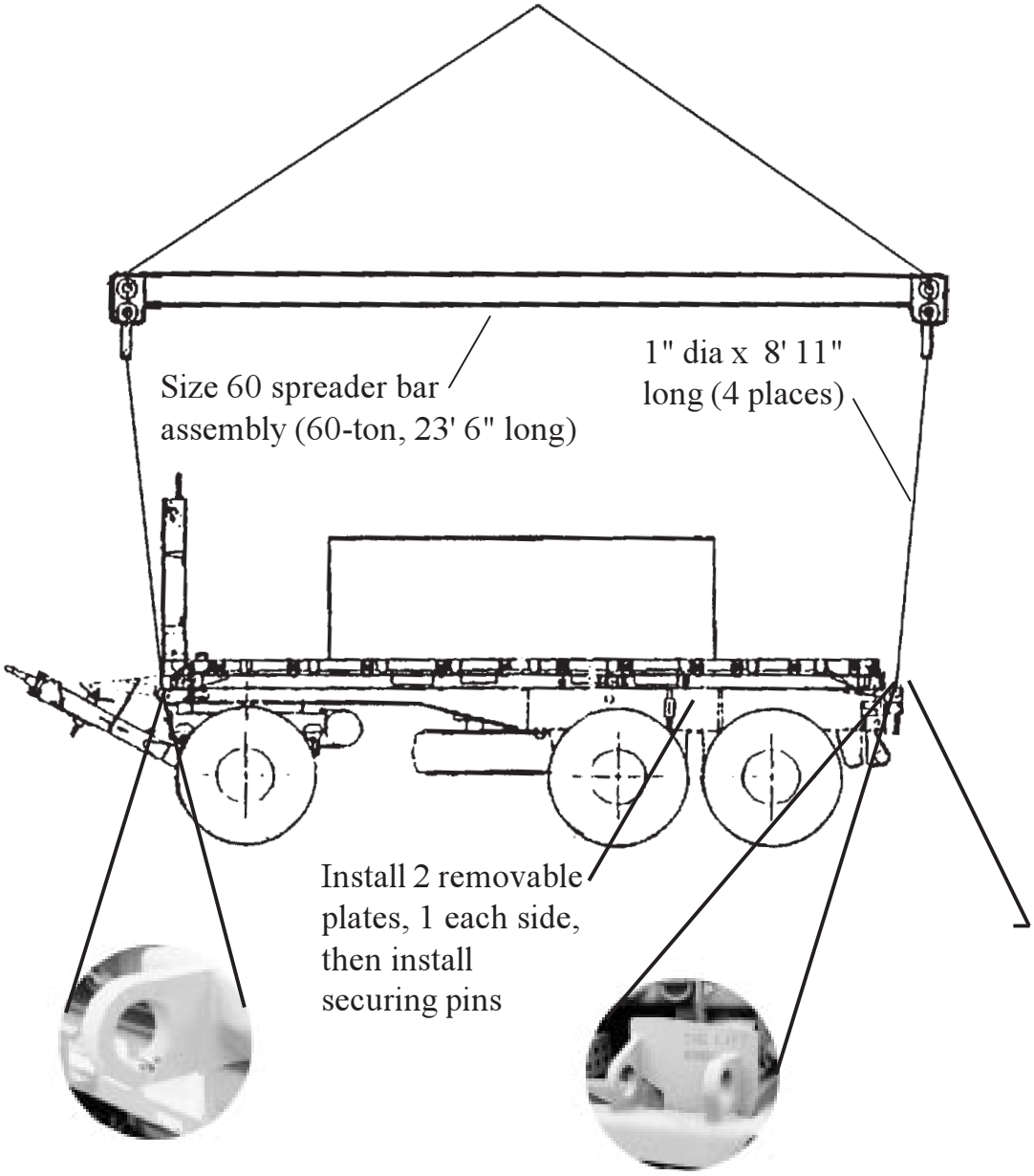

Other similar lifts: M1077 flatrack

PLS trailer (M1076) with flatrack (M1077).

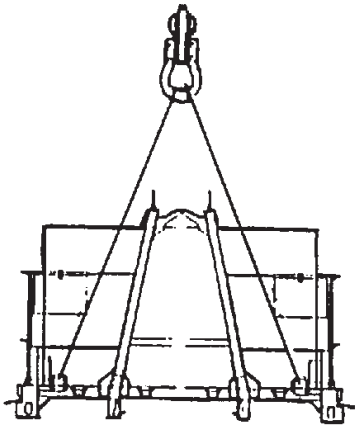

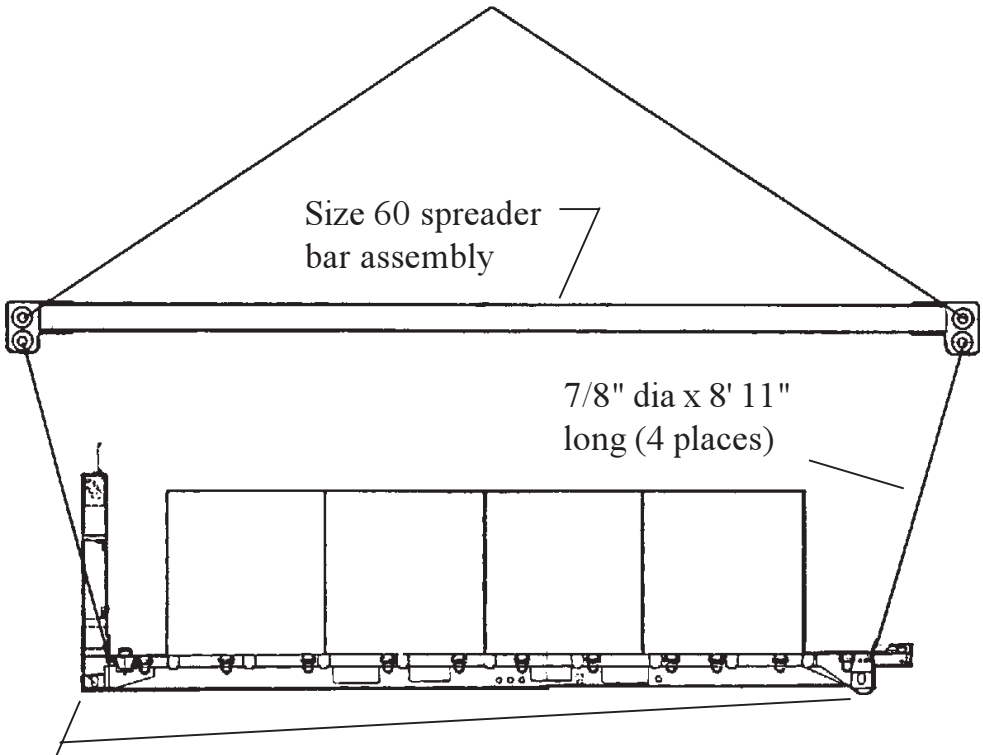

The M1077 can also be lifted with the lower sling legs attached to the flatrack's bottom ISO corner fittings (see page 7-5).

Other similar lifts: M1076 PLS trailer

PLS M1077 flatrack.

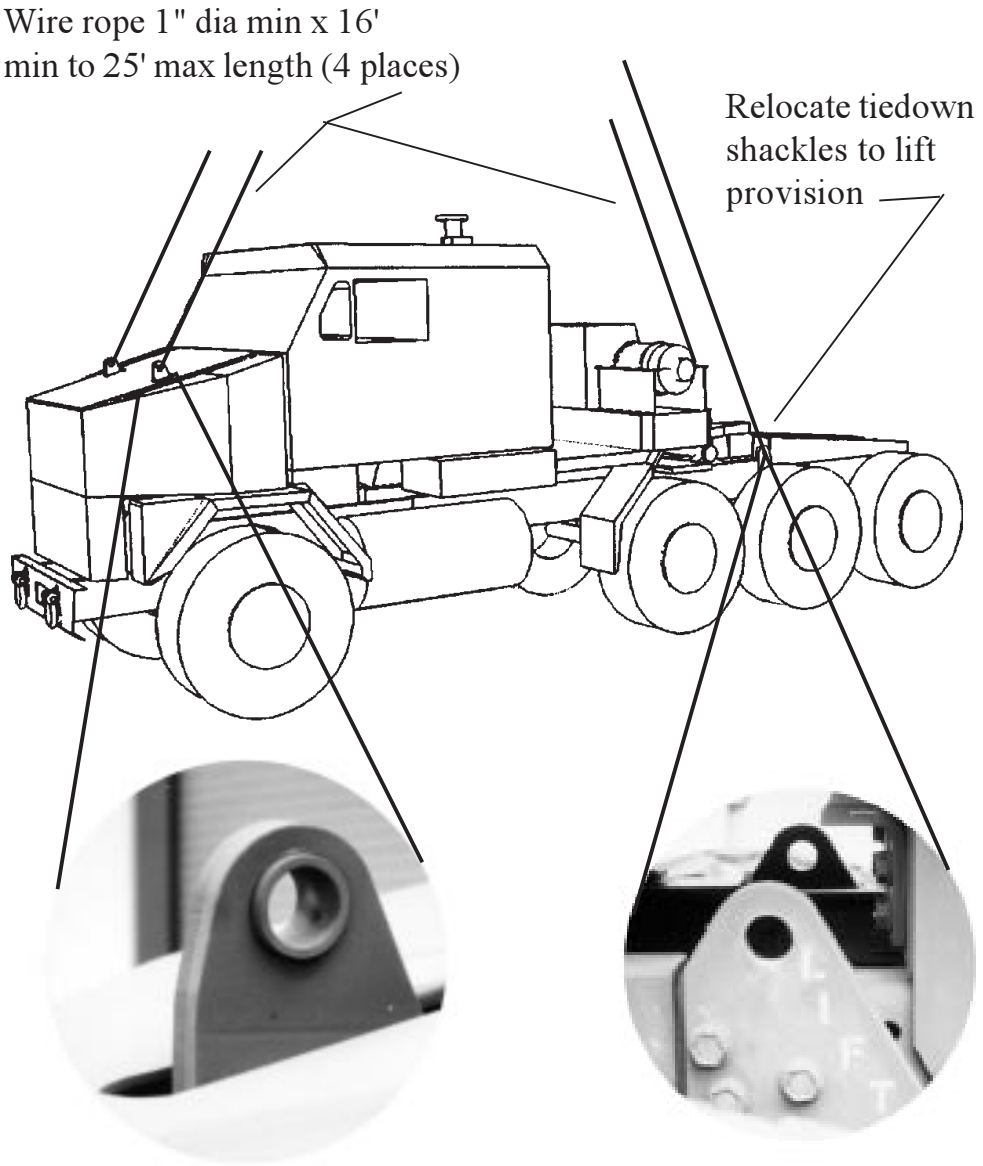

CAUTION

Use caution not to damage hood when installing shackle.

Other similar lifts: None

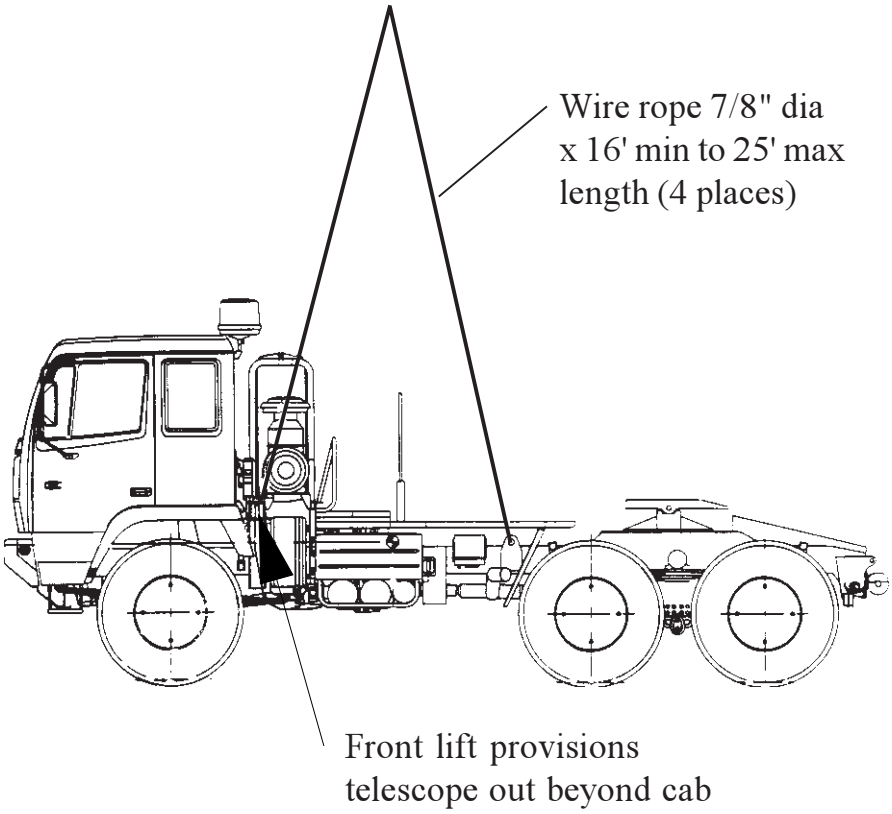

Other similar lifts: M1089 use 25' (4 places) or 16' (4 places) with 4' (2 places, front)

M1088, FMTV, 5-ton tractor.

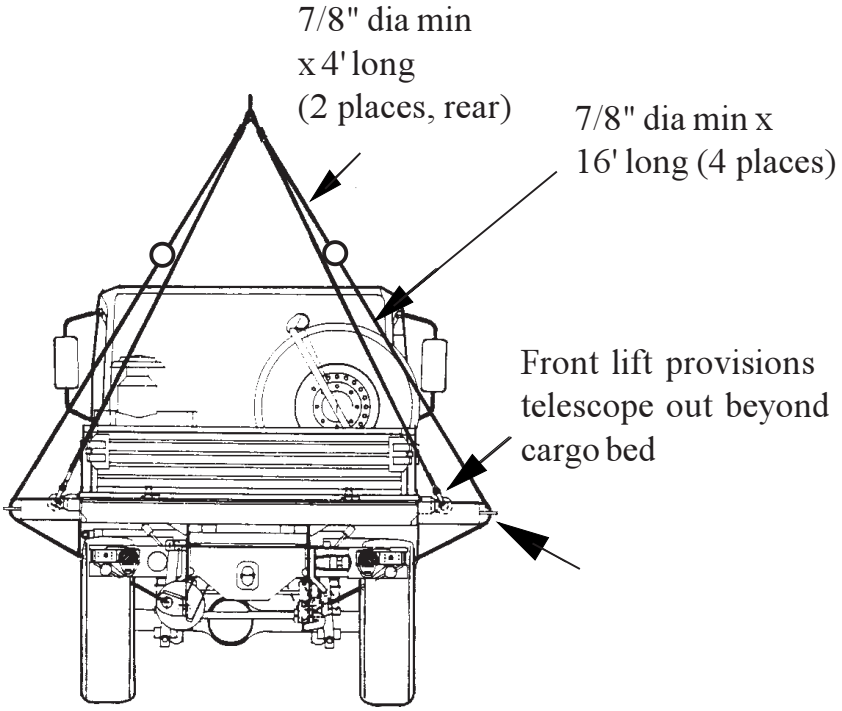

Rear View

NOTE

M1079 van has a top-mounted spreader device for lifting.

M1083, FMTV, 5-ton standard cargo.

Back to Contents

Section V. Lifting Trailers

If possible, trailers should be towed aboard ship by, and stowed with, their prime movers.

Fifth-wheel semitrailers should always be coupled to their prime mover when stowed.

When it is necessary to lift trailers, they should be lifted separately from their prime movers, and then recoupled before lashing.

Table 5-1 summarizes trailers addressed in this handbook.

Table 5-1. Trailers (Lifting).

Model	Item	Curb Weight (lb)	Gross Weight (lb)*	Page
M101A2	Trlr, Cargo, 3/4-ton	1,280	2,780	5-4
M105A2	Trlr, Cargo 1-1/2-ton	2,750	5,750	5-4
M107A1 /A2	Trlr, Tank, Water, 1-1/2-ton	2,280	5,280	5-6
M116A2	Trlr, Cargo, 3/4-ton	740	2,780	5-4
M116A3	Trlr, Cargo, 3/4-ton	795	3,160	5-4
M118A1	Semitrlr, Stake, 6-ton	8,060	20,090	5-5
M119A1	Semitrlr, Van, Cargo, 6-ton	8,140	20,470	5-5
M127A1C	Semitrlr, Stake, 12-ton	13,840	36,840	5-5
M128A1C	Semitrlr, Van, Cargo, 12-ton	15,220	39,220	5-5
M129A2C	Semitrlr, Van, Supply, 12-ton	15,400	39,400	5-5
M131A4	Semitrlr, Fuel, 5000 Gal.	12,900	36,165	5-14
M146	Semitrlr, Van, Shop, 6-ton	7,330	19,330	5-5
M149A2	Trlr, Tank, Water, 1-1/2-ton	2,730	6,062	5-6
M172A1	Semitrlr, Lowbed, 15-25-ton	16,600	16,600	5-7
M270A1	Semitrlr, Lowbed	17,500	17,500	5-8
M310	Trlr, Cable, Reel, 3-1/2-ton	2,950	9,950	5-6
M313	Semitrlr, Van Expand, 6-ton	15,350	27,350	5-5
M332	Trlr, Ammo/Gen Cargo, 1-1/2-T	2,875	5,875	5-6
M349A1	Semitrlr, Van, Refr, 7-1/2-ton	8,750	23,750	5-5

*Gross weight is the maximum permissible lifting weight.

Table 5-1. Trailers (Lifting), continued.

Model	Item	Curb Weight (lb)	Gross Weight (lb)*	Page
M373A2	Semitrlr, Van, Electronic, 6-ton	9,430	21,430	5-5
M416A1	Trlr, Cargo, 1/4-ton	670	1,170	5-9
M447	Semitrlr, Van, Shop, 6-ton	13,080	25,080	5-5
M747	Semitrlr, Lowbed, HET, 60-ton	31,000	71,000	5-11
M782	Semitrlr, Flatbed, 22-1/2-ton	17,400	84,600	5-12
M870A1	Trlr, Lowbed, 40-ton	16,500	96,500	5-16
M871	Semitrlr, Flatbed, 22-1/2-ton	15,900	60,900	5-12
M871A1	Semitrlr, Flatbed, 22-1/2-ton	15,630	61,630	5-12
M872A1	Semitrlr, Flatbed, 34-ton	19,240	86,440	5-12
M967A1	Semitrlr, fuel, 5000	13,020	48,020	5-14
M969A1	Gal.	15,140	50,140	5-14
M969A2	Semitrlr, fuel, 5000	16,810	51,810	5-13
M970A1	Gal.	16,810	51,810	5-14
M989A1	Semitrlr, fuel, 5000	10,650	32,650	5-18
M1000	Gal.	50,400	100,400	5-15
M1048	Semitrlr, fuel, 5000	7,940	19,940	5-17
M1061	Gal.			5-17
M1061A1	Trlr, (HEMAT)	5,850	15,000	5-17
M1073	Semitrlr, HET	6,640	20,255	5-17
M1098	Trlr, MTSS, 6-1/2-ton	16,810	55,810	5-14
	Trlr, Flatbed, 5-ton			
HP15T	Trlr, Gen. Purp, 5-ton	8,000	38,000	5-17
	Trlr, Flatbed, 7-1/2-ton			
PU-732/M	Semitrlr, Water, 5000 Gal.	N/A	6,080	5-10
	Trlr, Flatbed, Tilt Deck, 15-ton			
	Trlr, Power Unit			

*Gross weight is the maximum permissible lifting weight.

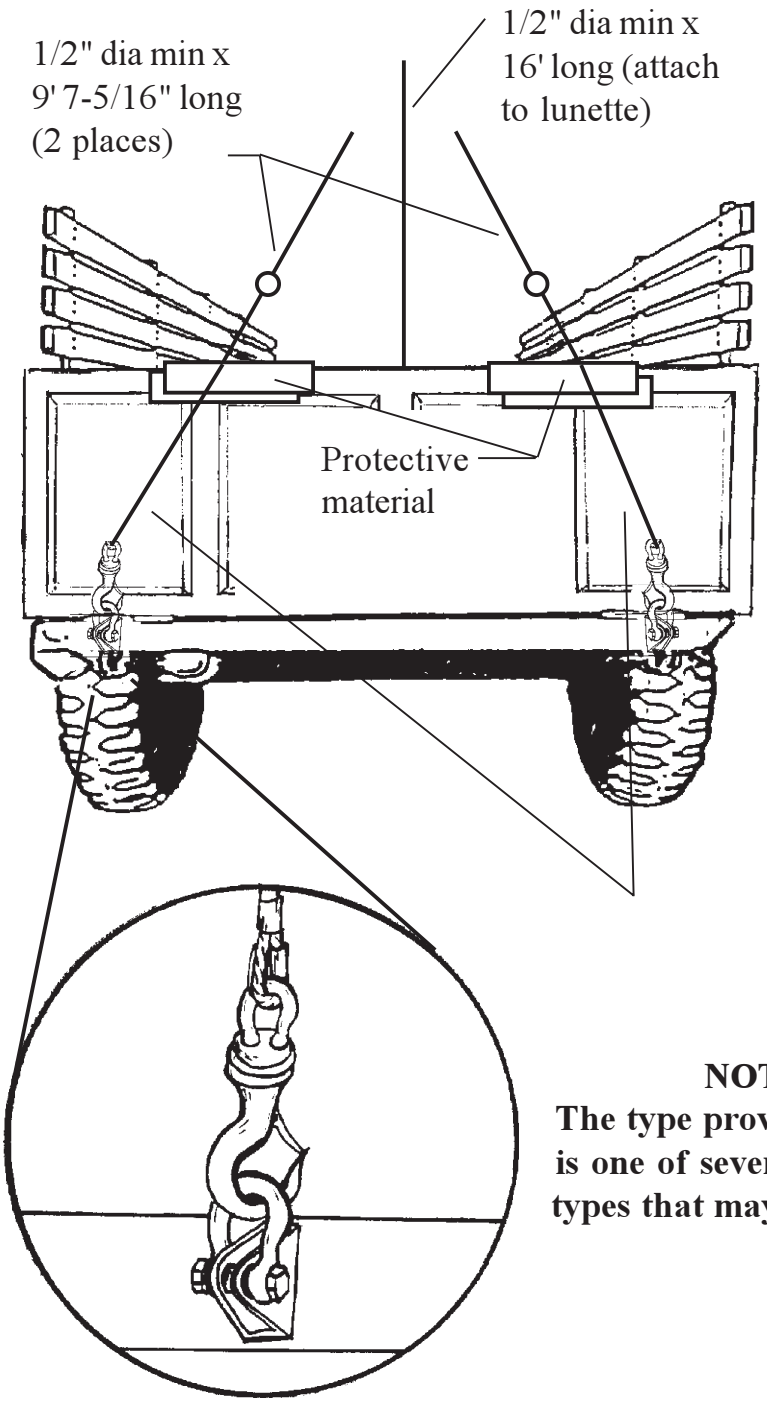

NOTE
The type provision shown is one of several different types that may be present.

Other similar lifts: M101A2, M116A2, M116A3

M105A2, trailer, cargo, 1-1/2-ton.

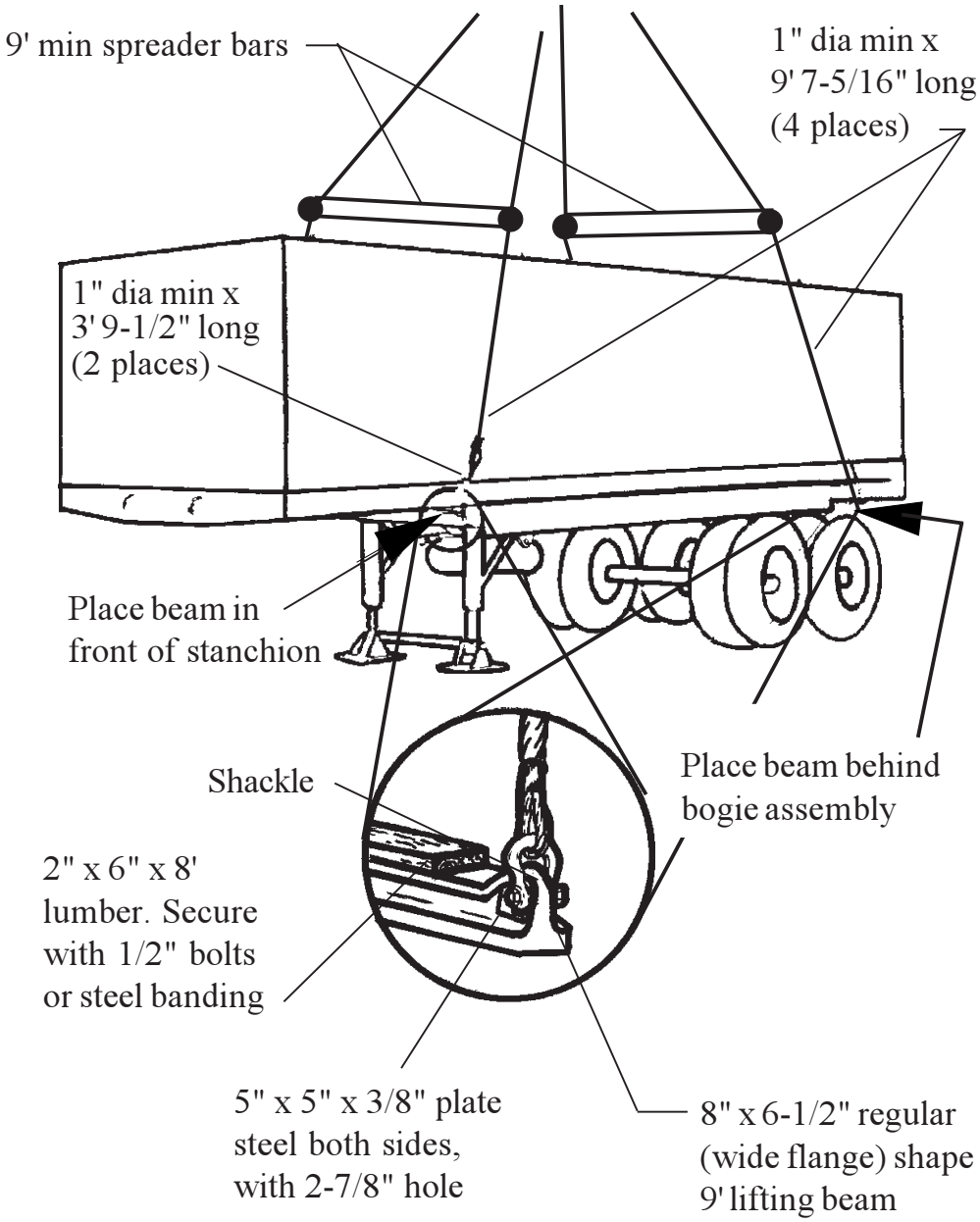

Other similar lifts: M118A1, M119A1, M127A1C, M129A2C, M146, M313, M349A1, M373A2, M447

M128A1C, semitrailer, van, cargo, 12-ton.

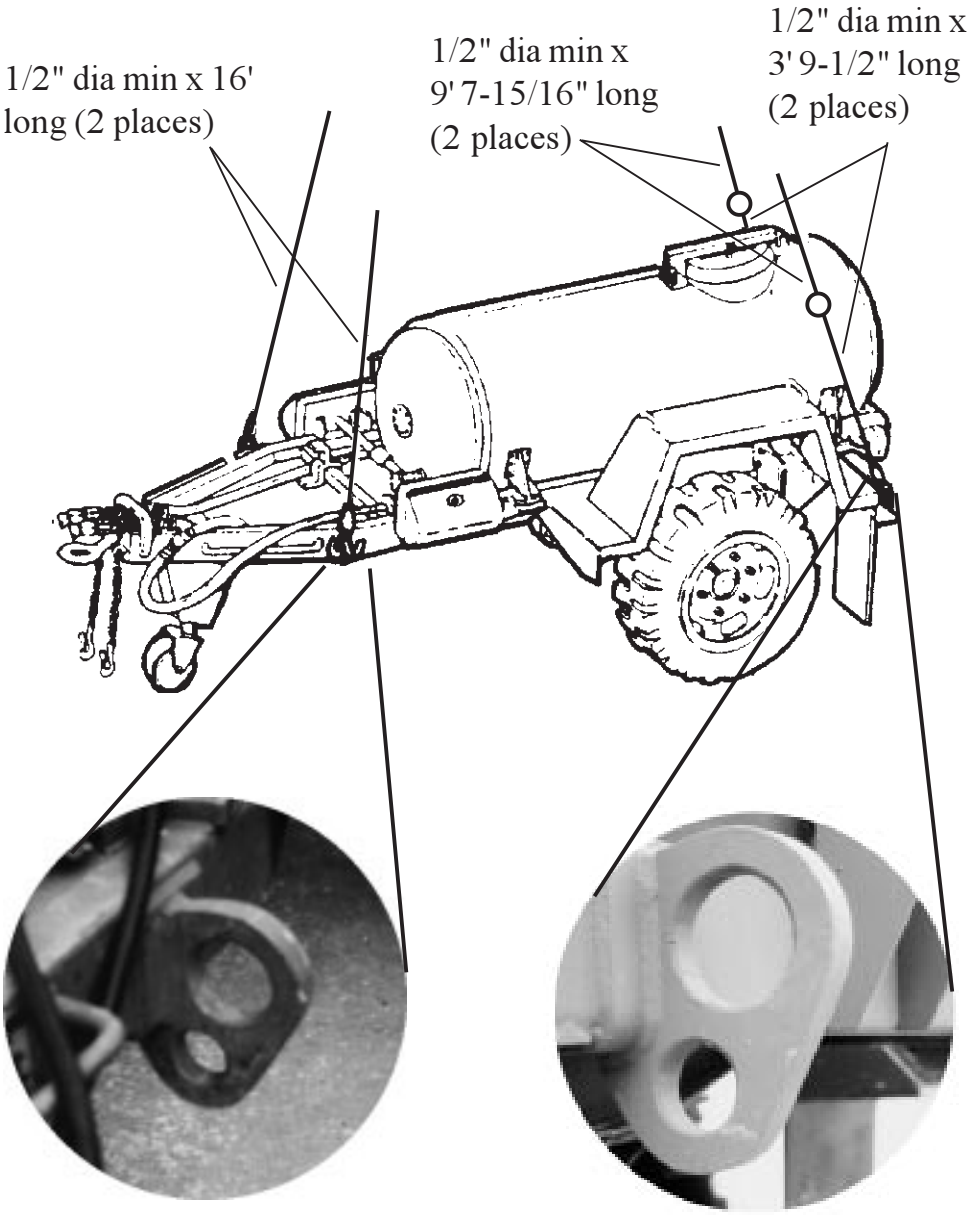

NOTE
Trailers may have various types of provisions.

Other similar lifts: M107A1/A2, M310, M332

M149A2, trailer, tank, water, 1-1/2-ton.

WARNING

Do not lift M172 trailer loaded with cargo.

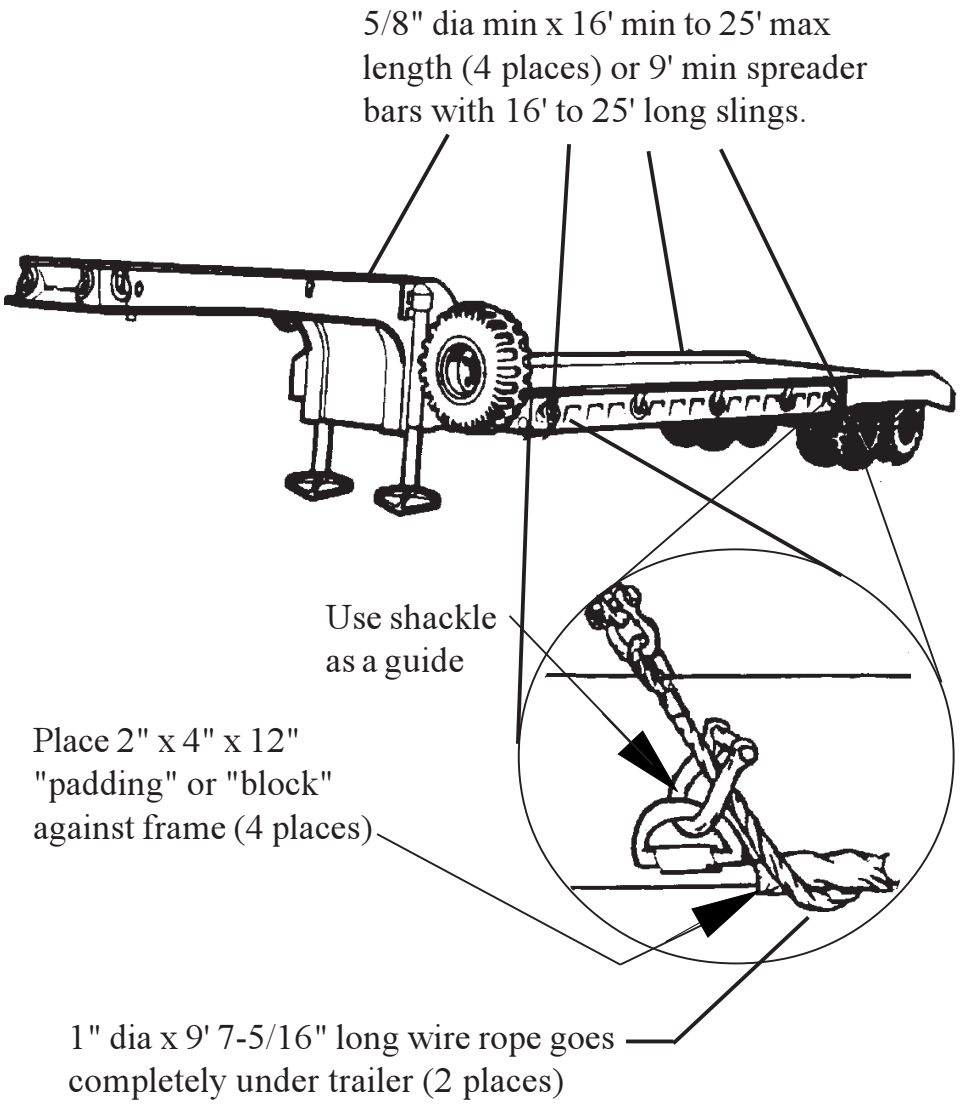

Other similar lifts: None

M172A1, semitrailer, lowbed, 15- to 25-ton.

WARNING

Do not lift M270A1 trailer loaded with cargo.

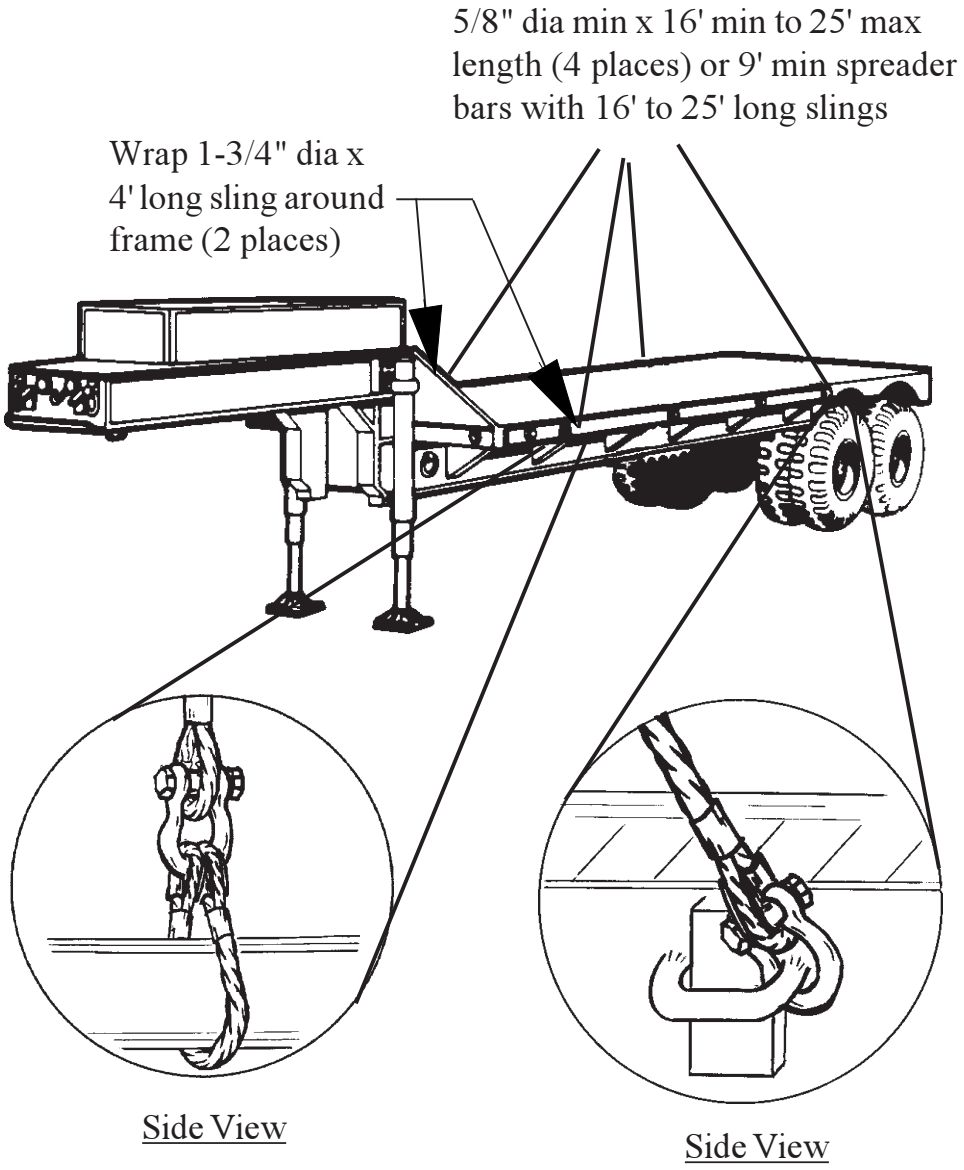

Other similar lifts: None

M270A1, semitrailer, lowbed, wrecker, 12-ton.

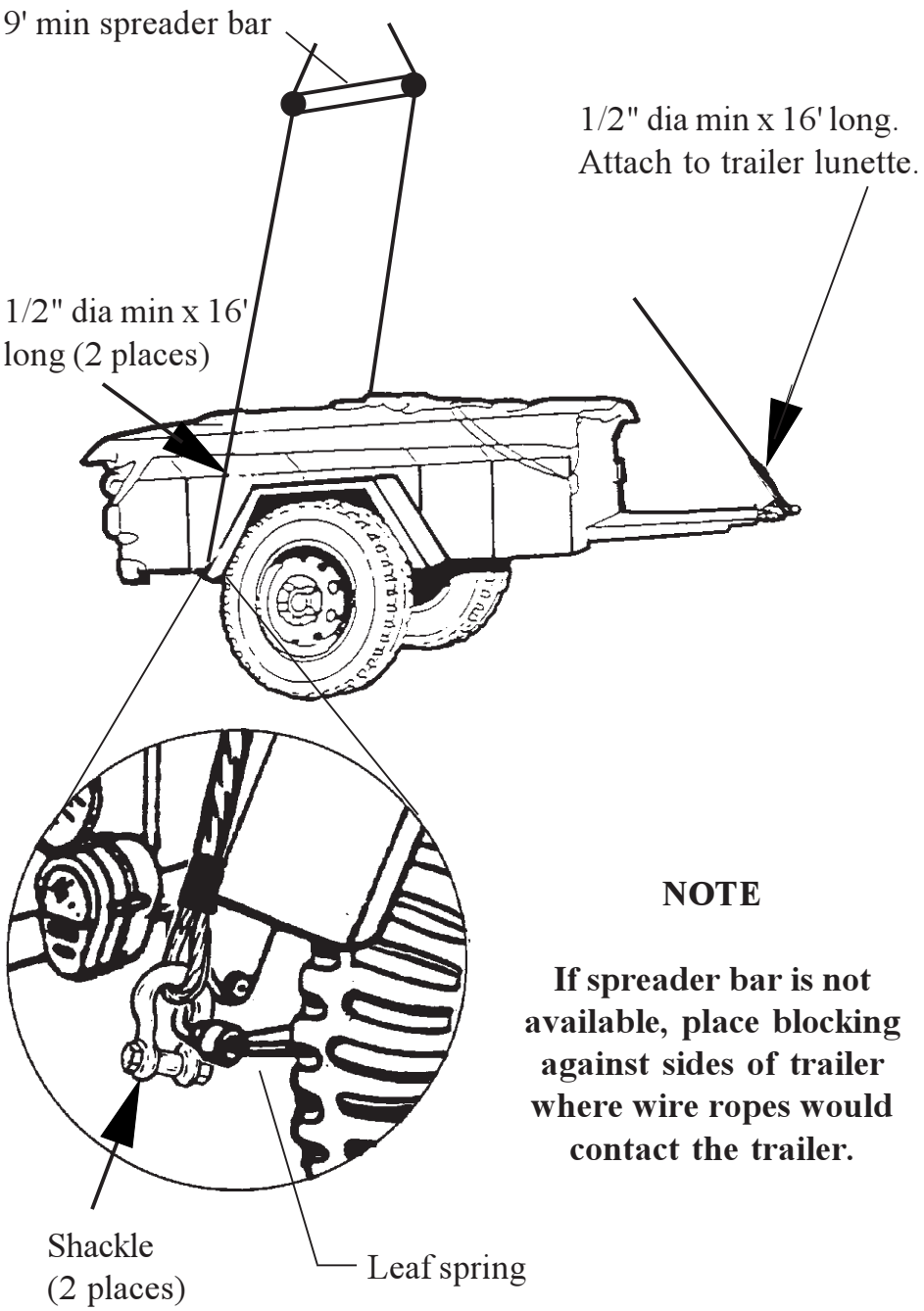

NOTE

If spreader bar is not available, place blocking against sides of trailer where wire ropes would contact the trailer.

Other similar lifts: None

M416A1, trailer, cargo, 1/4-ton.

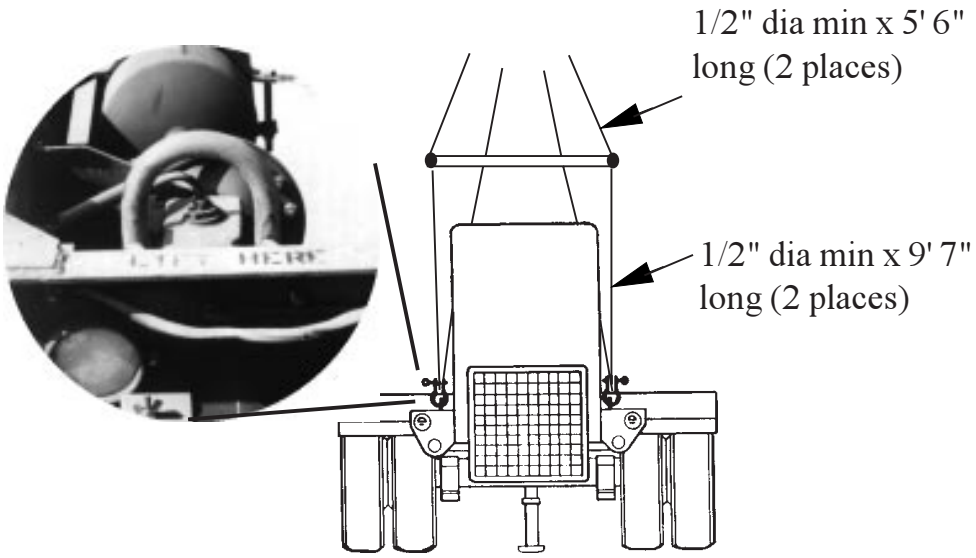

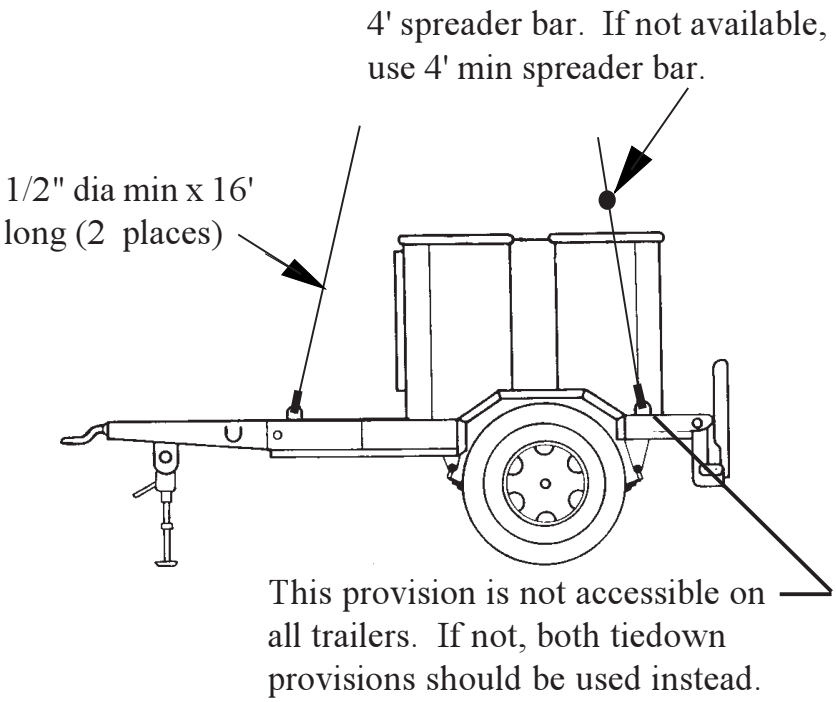

NOTE
Spreader bar provided with trailer.

Other similar lifts: PU-405 A/M, PU-406 B/M, PU-495 B/G, PU-650 B/G, and so forth.

PU-732/M power unit.

WARNING

Maximum cargo load is 20 tons. When lifting loaded semi-trailer, use size 60 sling assembly with short legs forward.

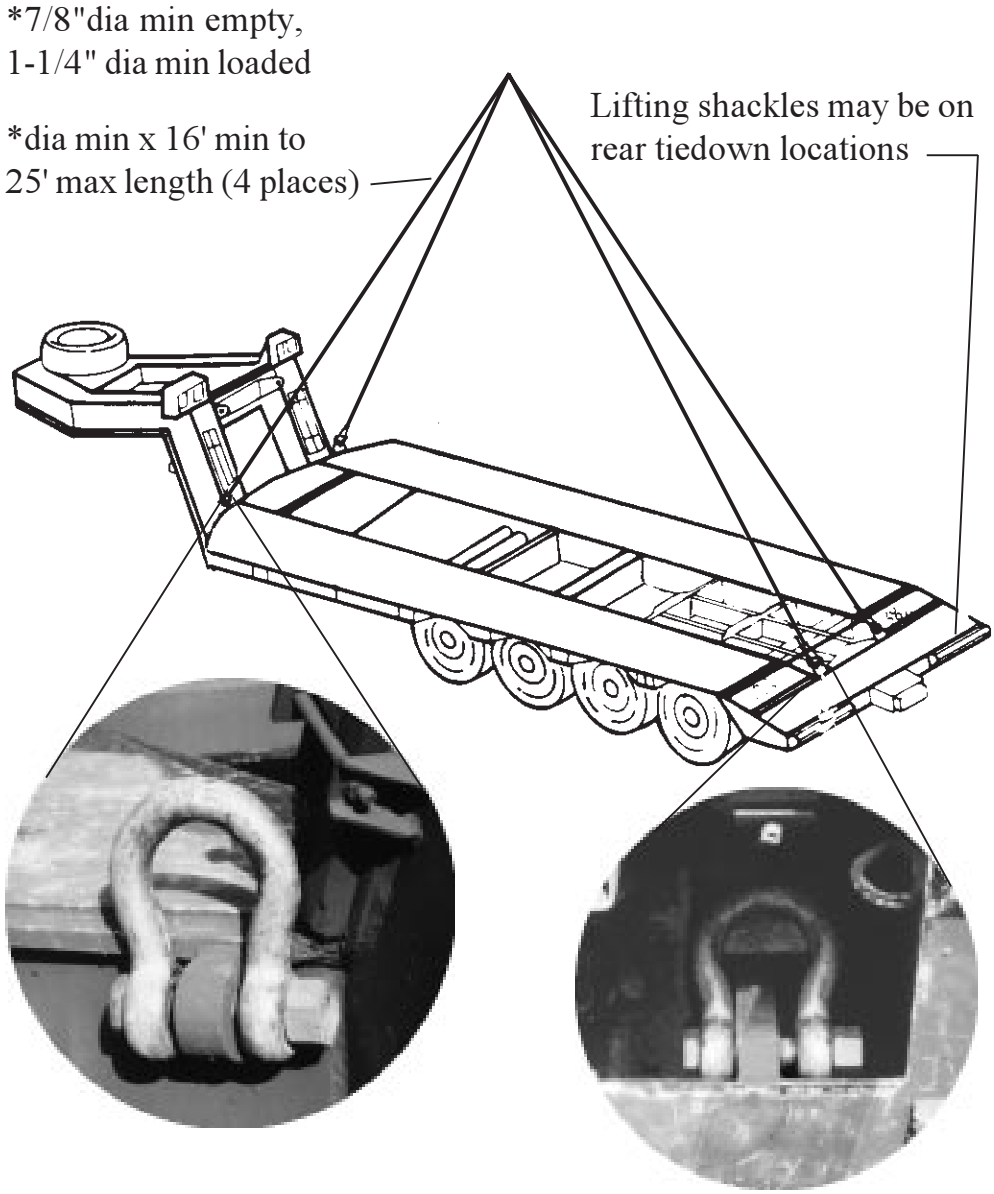

Other similar lifts: None

M747, semitrailer, lowbed, HET, 60-ton.

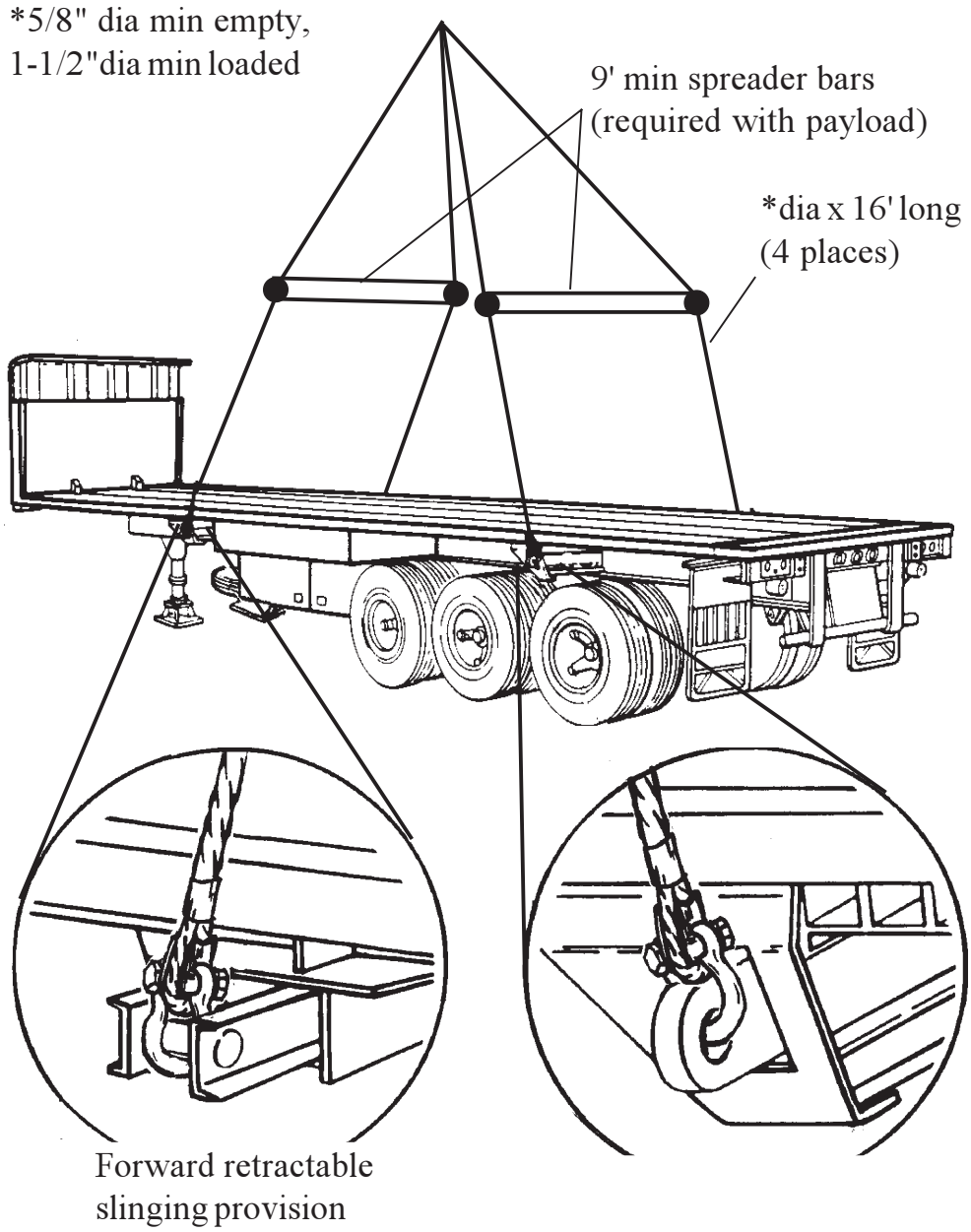

NOTE
All cargo must be evenly distributed and secured on the trailer.

Other similar lifts: M782, M871, M871A1, M872A3, M970A1, M970A2

M872A1, semitrailer, flatbed, 34-ton.

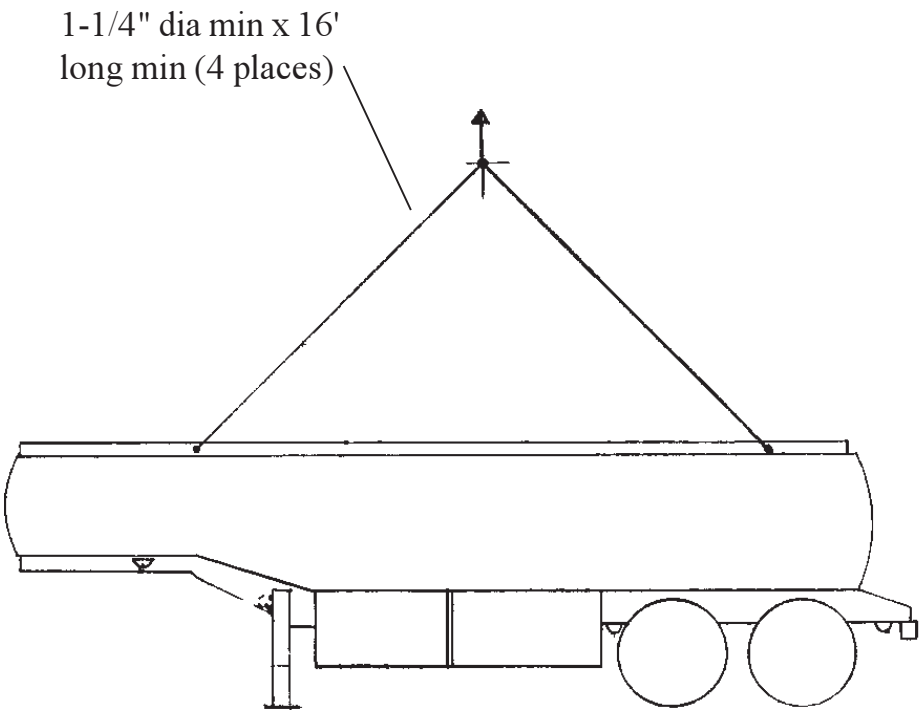

NOTE
This is the only fuel semitrailer approved for lifting using the lift provisions (see page 5-14).

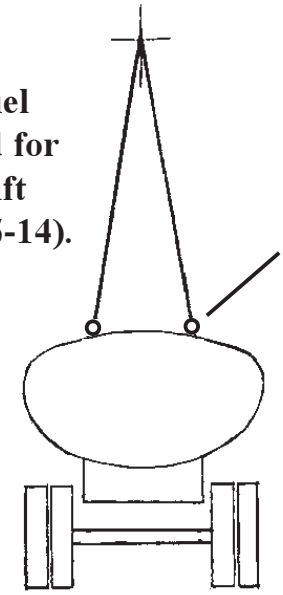

Other similar lifts: None

M969A2 semitrailer, fuel.

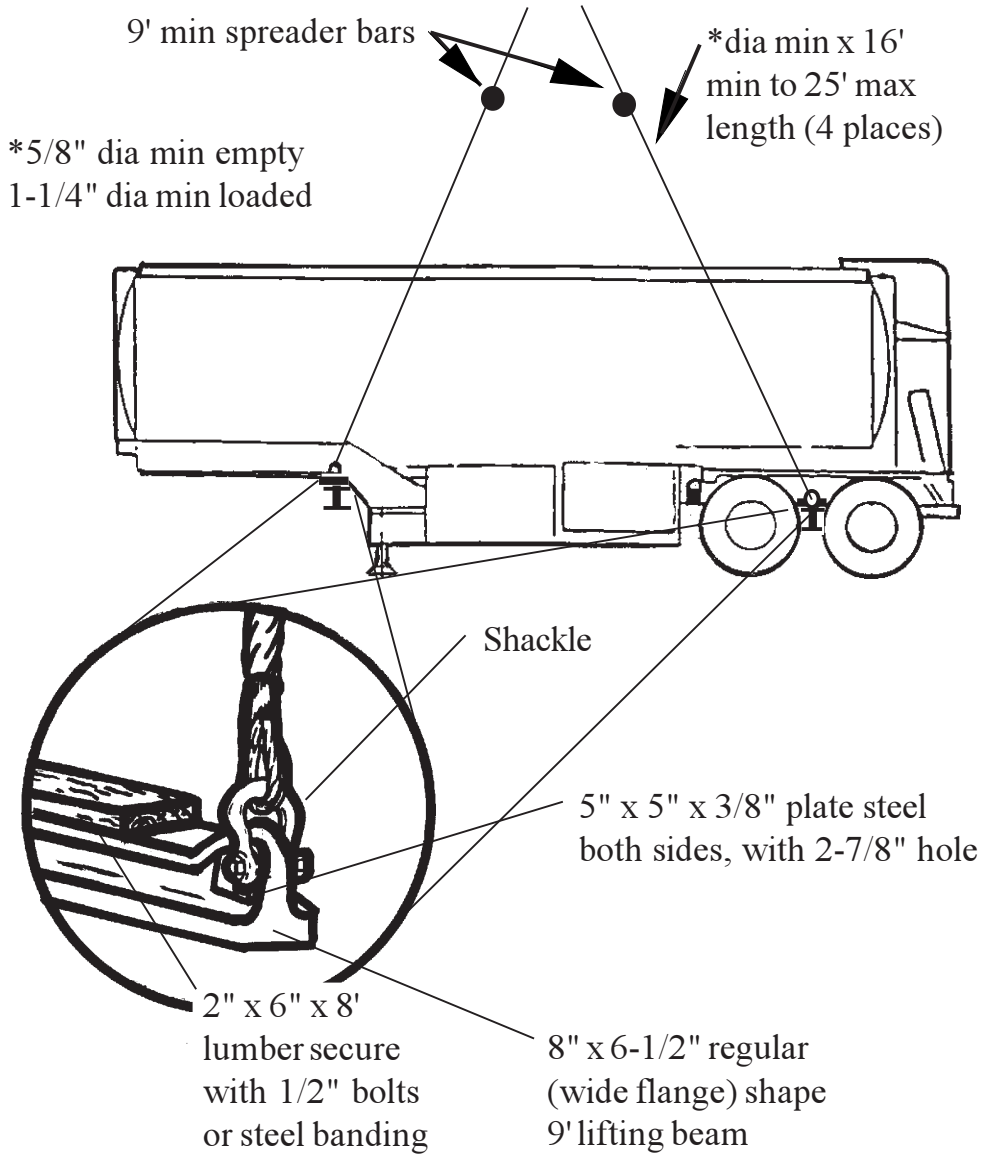

Other similar lifts: M967A1, M969A1, M970A1, M1098

M131A4 semitrailer, fuel.

*1" dia min empty, 1-1/2" dia min with 50,500 pound payload

*dia min x 16' min to 25'
max length (4 places)

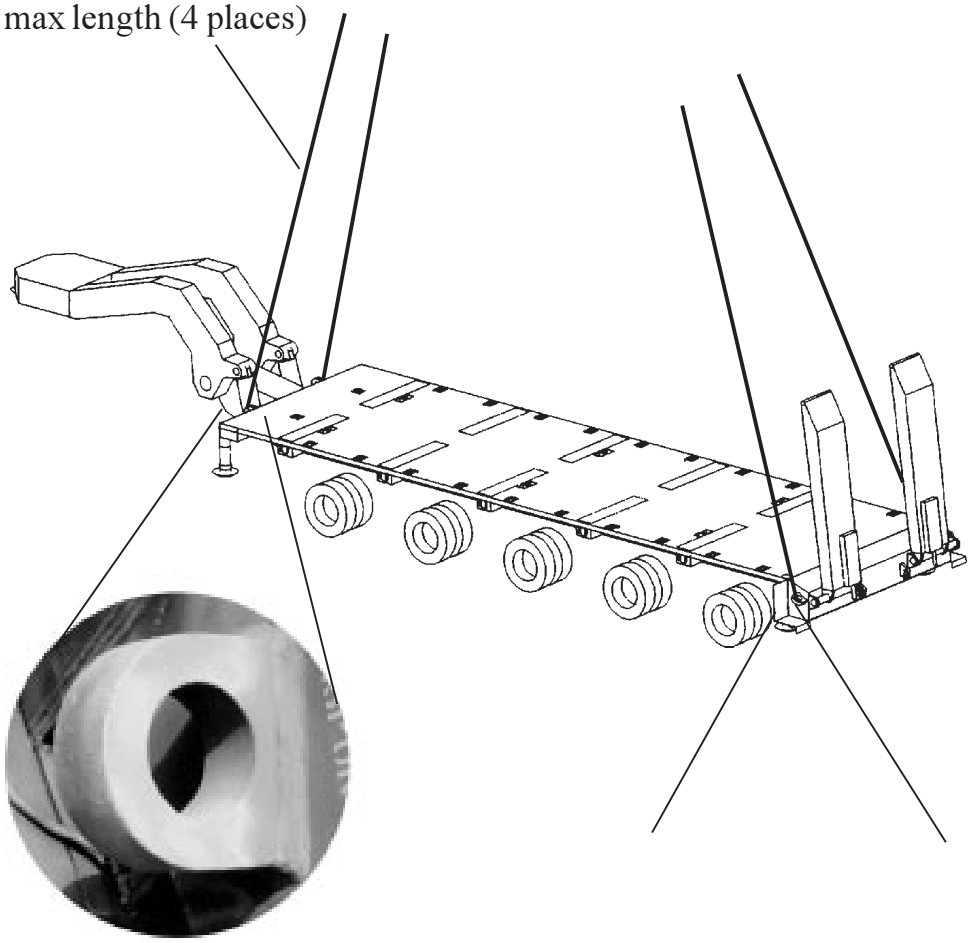

CAUTION

Lifting is restricted to a 50,500-pound payload. Also, ensure that the hydraulic gooseneck is in the locked position.

*5/8" dia min empty, 1-1/2" dia min loaded

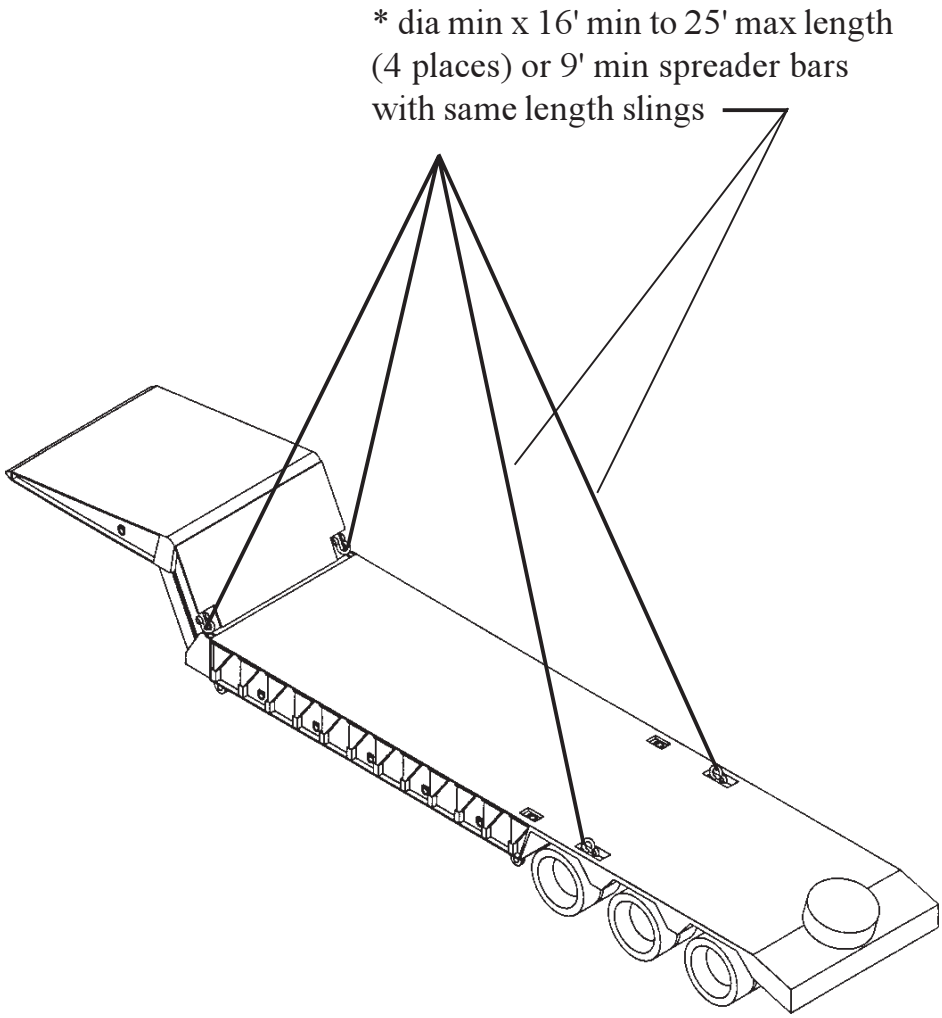

Other similar lifts: None

M870A1, semitrailer, lowbed, 40-ton.

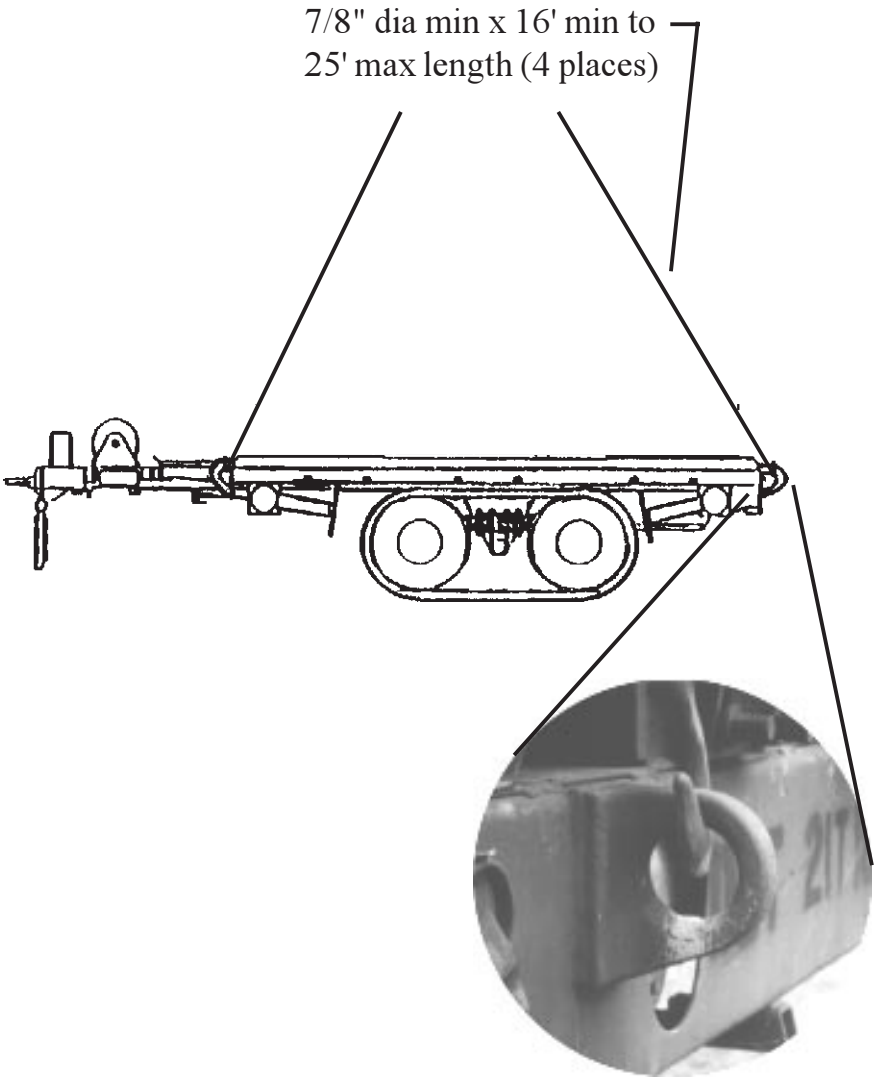

NOTE
When trailer is loaded, a spreader bar is required for lifting. Use the M1076 (page 4-31) configuration with a size 60 A spreader bar.

Other similar lifts: M1061, M1061A1, M1073, HP15T

M1048, trailer, TSS.

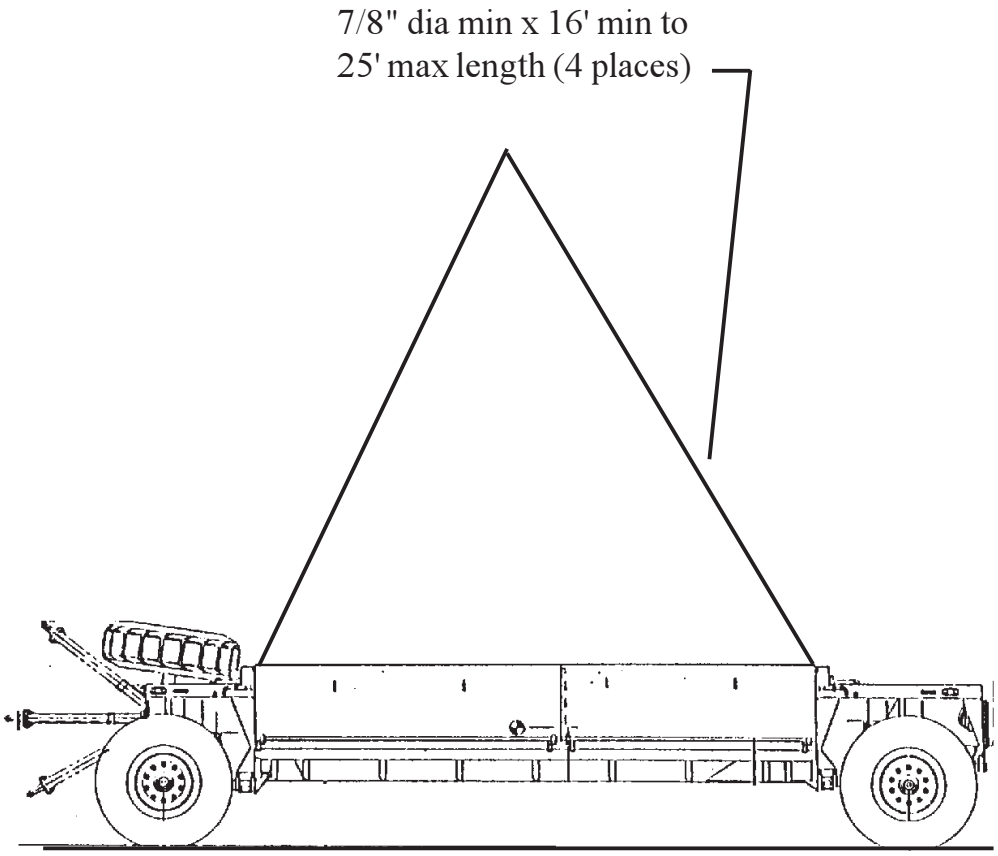

Other similar lifts: None

M989A1, HEMAT.

Back to Contents

Section VI. Lifting Tracked Vehicles

This section provides guidance for safe lifting of tracked vehicles. If it is necessary to drive the vehicles to their stow positions, track pads must be installed or the vehicles must be driven over lumber so no metal-to-metal contact is made.

Table 6-1 summarizes tracked vehicles included in this handbook.

Table 6-1. Tracked Vehicles (Lifting).

Model	Item	Curb Weight (lb)	Gross Weight (lb)	Page
M1	Tank, Combat	N/A	123,000	6-3
M1A1	Tank, Combat	125,000	135,200	6-3
M1A2	Tank, Combat	128,600	137,360	6-3
M2	Vehicle, Infantry Fighting	N/A	47,000	6-5
M2A1	Vehicle, Infantry Fighting	43,132	50,617	6-5
M2A2	Vehicle, Infantry Fighting	53,247	67,282	6-5
M3	Vehicle, Cavalry Fighting	N/A	48,450	6-5
M3A1	Vehicle, Cavalry Fighting	42,502	50,190	6-5
M3A2	Vehicle, Cavalry Fighting	53,157	67,213	6-5
M9	Earthmover, Armored Combat	36,000	N/A	6-6
M88	Vehicle, Recovery	107,600	109,600	6-3
M88A1E1	Vehicle, Recovery, Imp	129,000	139,600	6-3
M106A2	Carrier, Mortar, 107-mm	25,044	26,876	6-8

Table 6-1. Tracked Vehicles (Lifting), continued.

Model	Item	Curb Weight (lb)	Gross Weight (lb)	Page
M109A6	Howitzer, 155-mm, Med, SP	56,000	64,200	6-7
M110A2	Howitzer, 8-in., Hvy, SP	55,800	62,500	6-4
M113A2	Carrier Personnel	21,887	25,007	6-8
M125A2	Carrier, Mortar, 81-mm	23,424	25,256	6-8
M548A1/E1	Carrier, Cargo, 6-ton	15,322	28,290	6-9
M577A2	Carrier, Command Post	24,142	25,813	6-8
M728	Vehicle, Cbt Engr, Full Track	N/A	117,400	6-4
M901A1	Vehicle, Cbt, Improved TOW	N/A	26,000	6-8
M992	Vehicle, Field Arty Ammo Spt	46,500	58,500	6-7
M992A1	Carrier, Ammo	46,800	57,000	6-7
M992A2	Carrier, Ammo	42,600	63,600	6-7
M1015A1	Carrier, Full Track	17,390	26,785	6-9
M1059	Carrier, Smoke Gen.	23,700	24,400	6-9
D7	Caterpillar Tractor, with blade and ripper	38,196	52,450	6-10

Place 2-1/2" dia shackles
(4 places). See page 3-3
for shackle details.

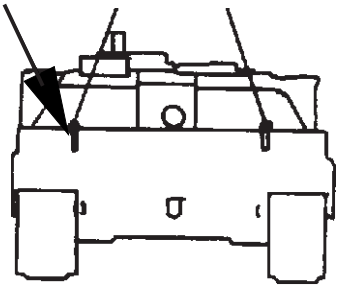

Rear Elevation

1-3/4" dia min x 16' min to
25' max length (4 places)

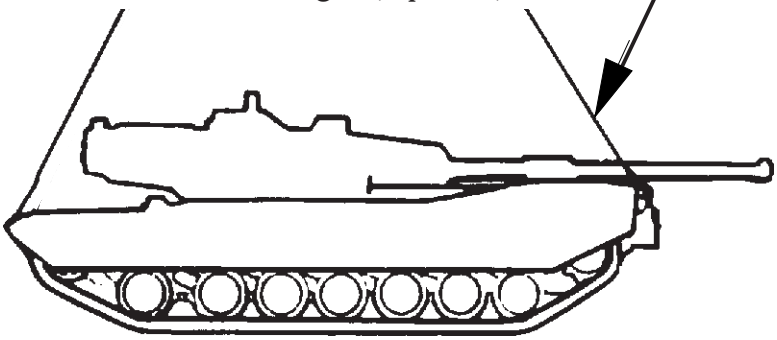

CAUTION

To avoid interference, the turret must be rotated 180° as shown before lifting. If bustle racks are installed, use page 6-4.

Other similar lifts: M88, M88A1E1

M1-series tank without bustle racks.

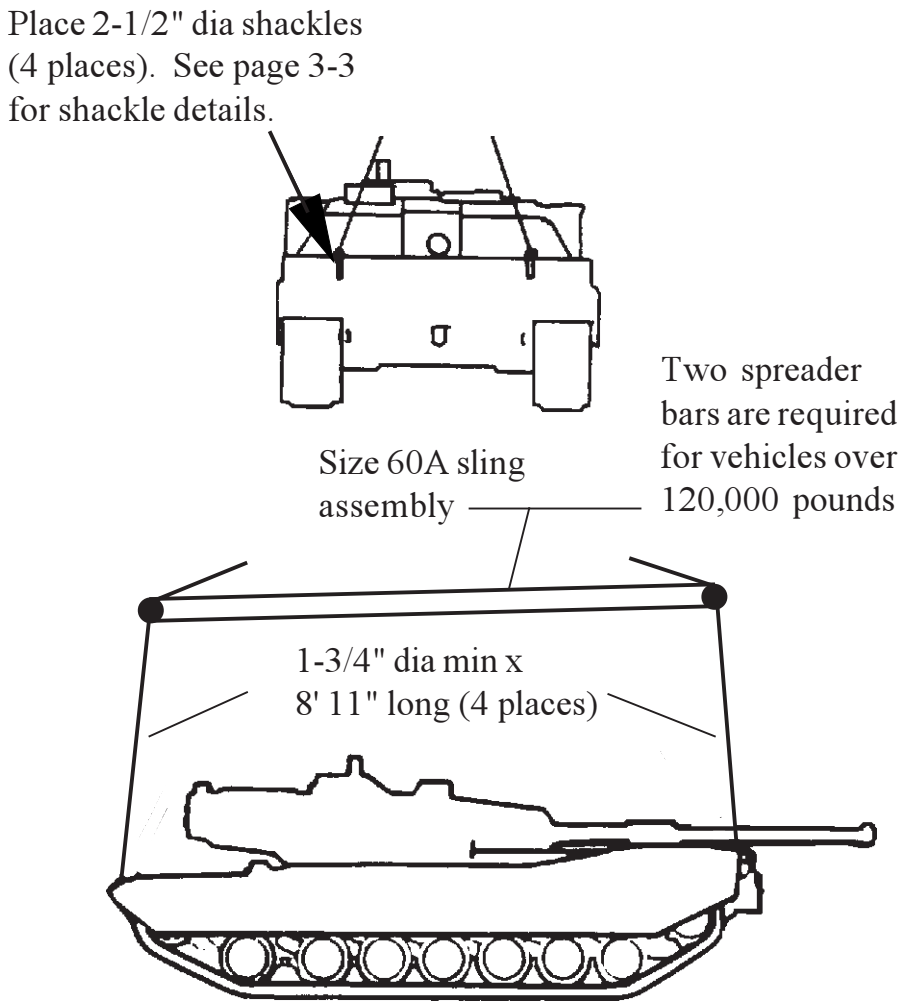

CAUTION

The turret must be rotated 180° as shown before lifting.

Other similar lifts: M88, M88A1E1, M110A2, M728

M1-series tank using spreader bar.

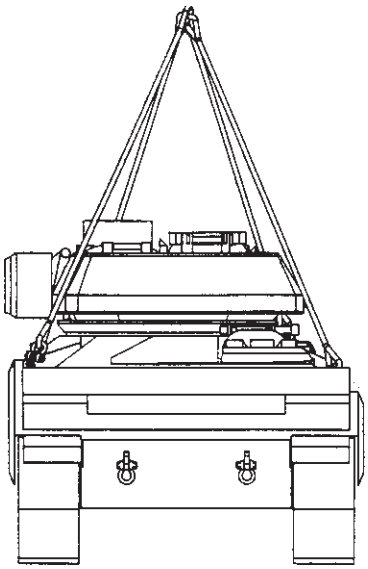

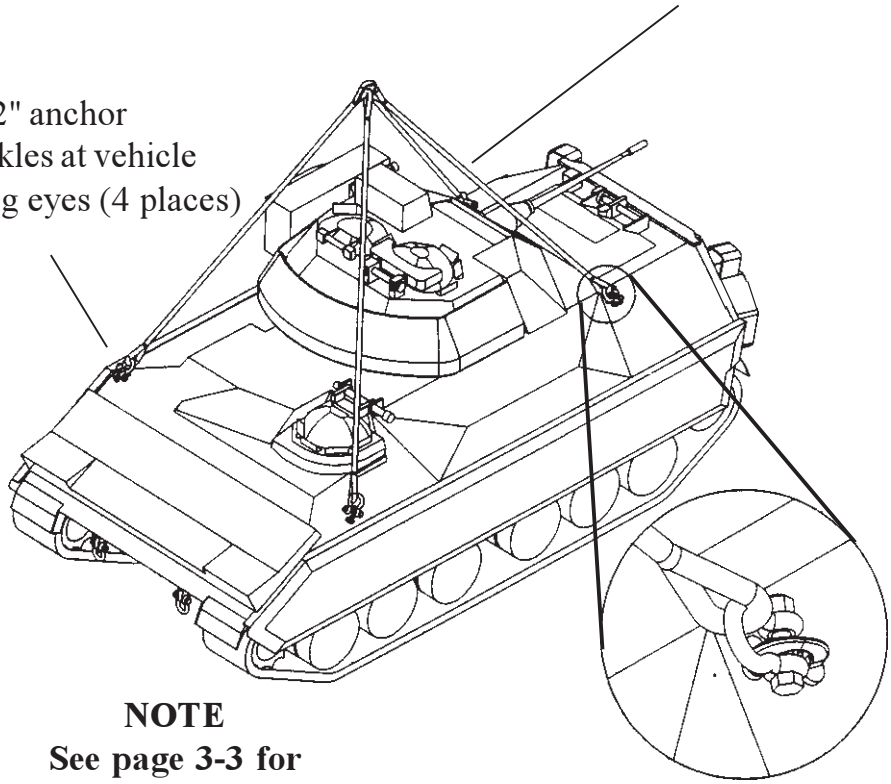

NOTE
See page 3-3 for shackle details.

Other similar lifts: M2A1/A2, M3A1/A2

M2/M3, fighting vehicles.

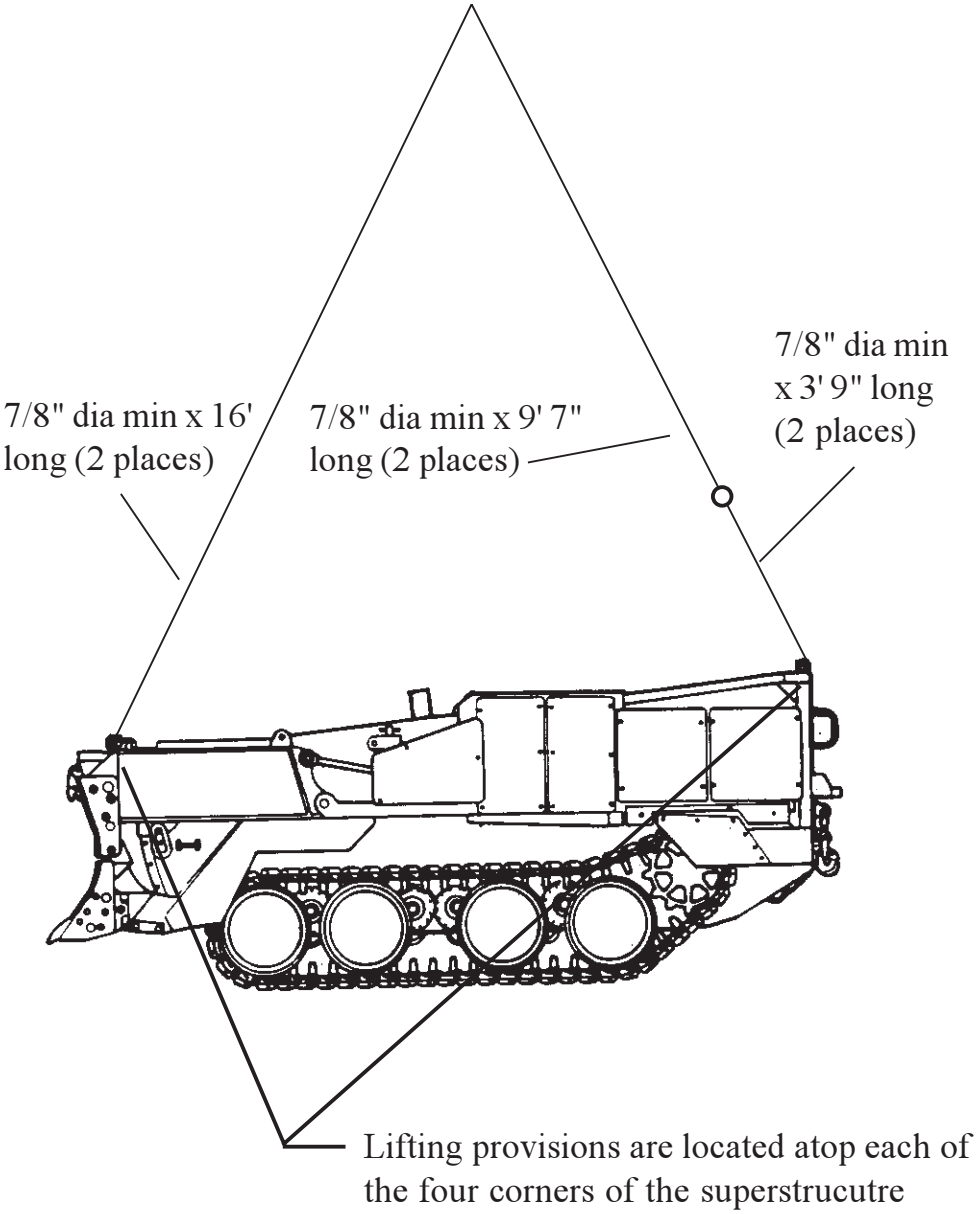

Other similar lifts: None

M9, armored combat earthmover (ACE).

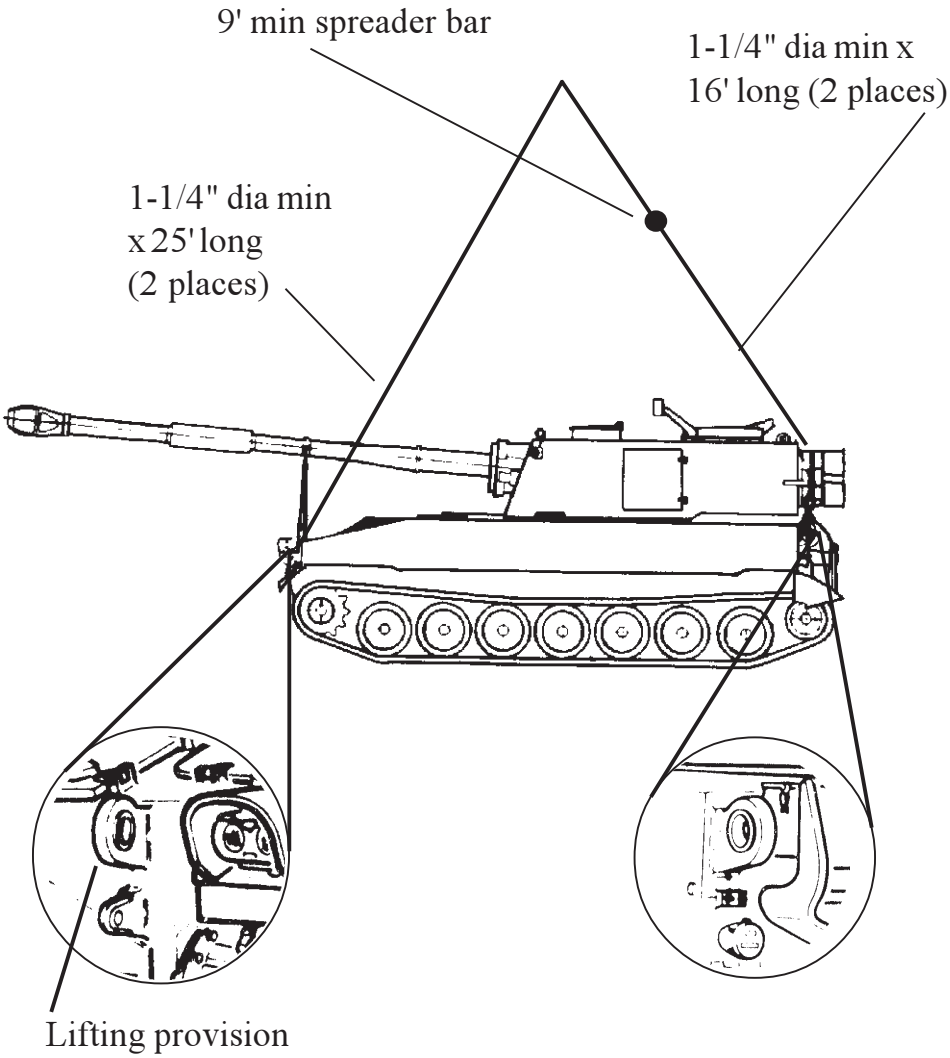

Other similar lifts: M992, M992A1, M992A2, M109A2-A5

M109A6, howitzer, 155 mm, medium, full-tracked.

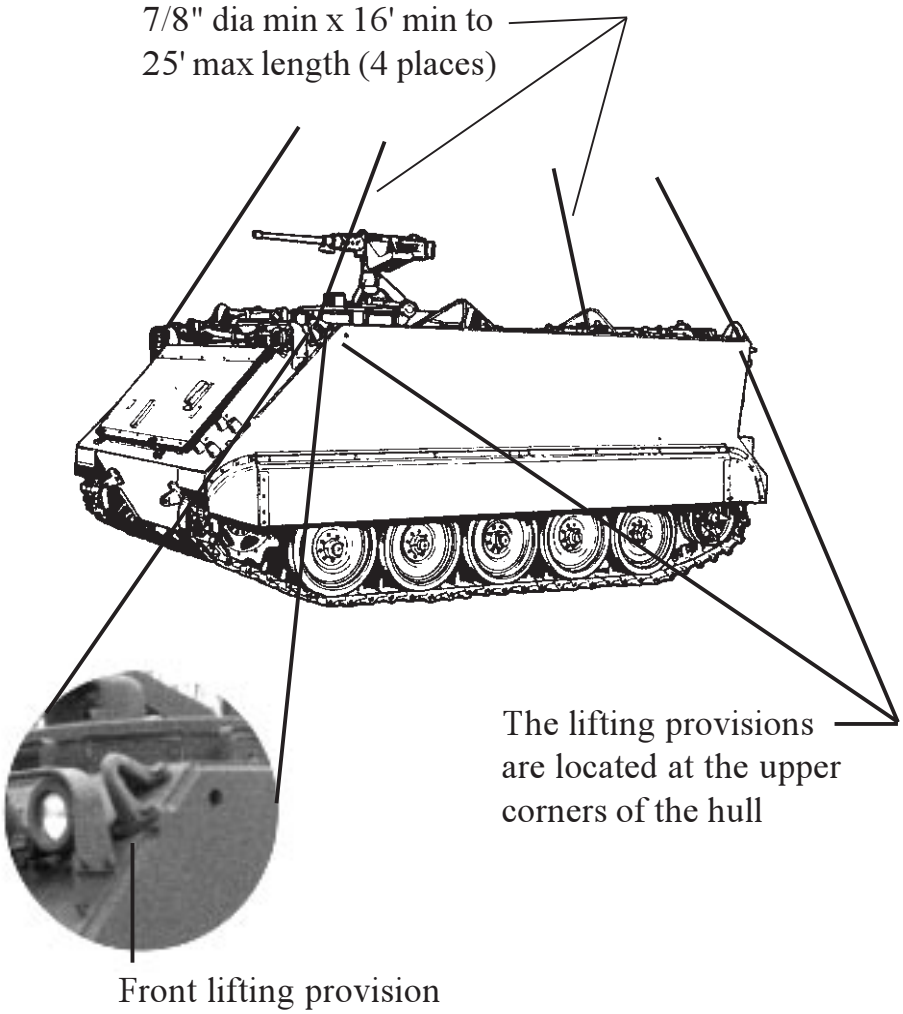

NOTE
Use 1-1/2" shackle (4 places).

Other similar lifts: M106A2, M113A3, M125A2, M577A2, M667, M741A1, M901A1, M981, M1059, M1064, M1068

M113A2, carrier, personnel.

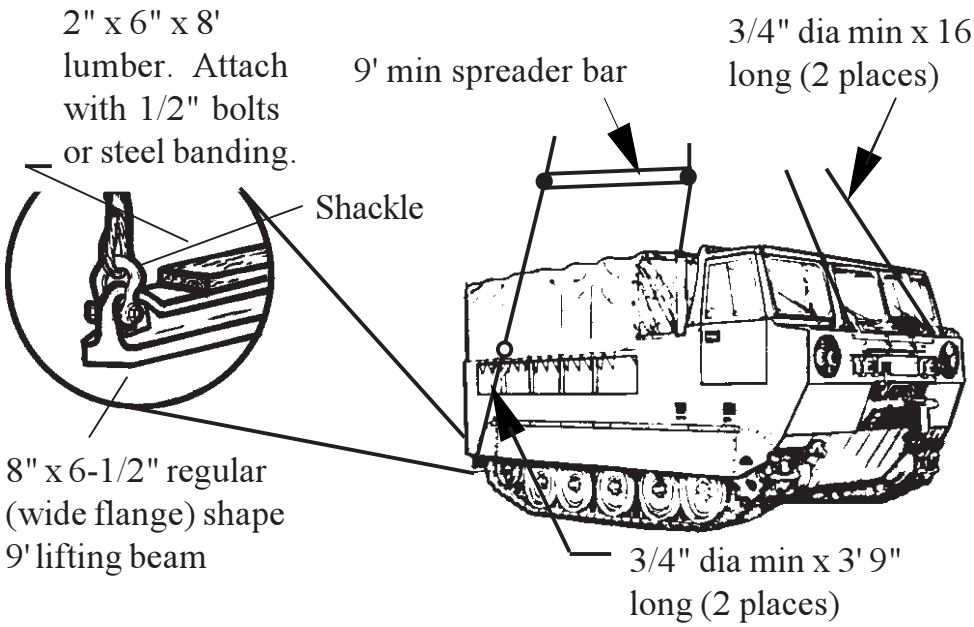

Lifting Method With Cargo

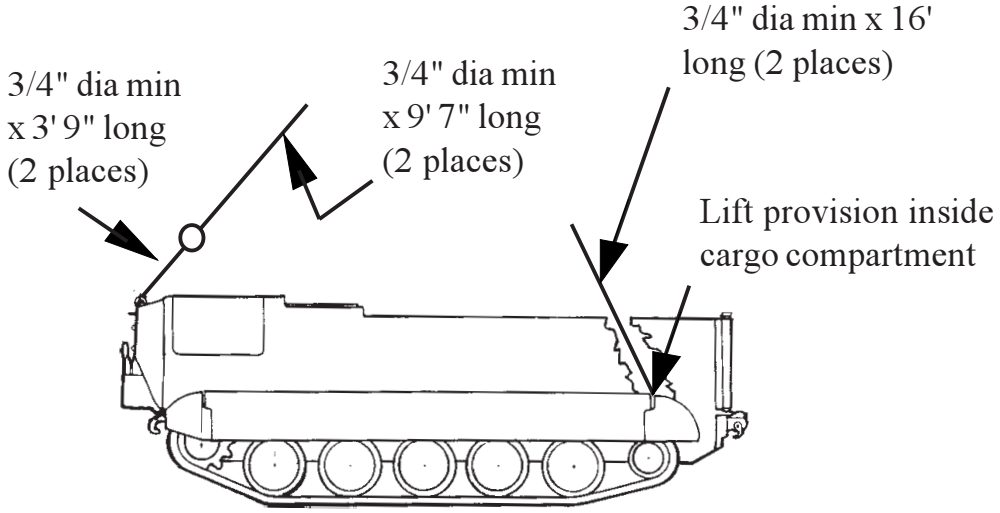

Lifting Method Without Cargo

Other similar lifts: M730A2, M1015A1, M1059

M548A1E1, carrier, cargo, 6-ton.

CAUTION

The ripper shanks should be turned upward for marine transport.

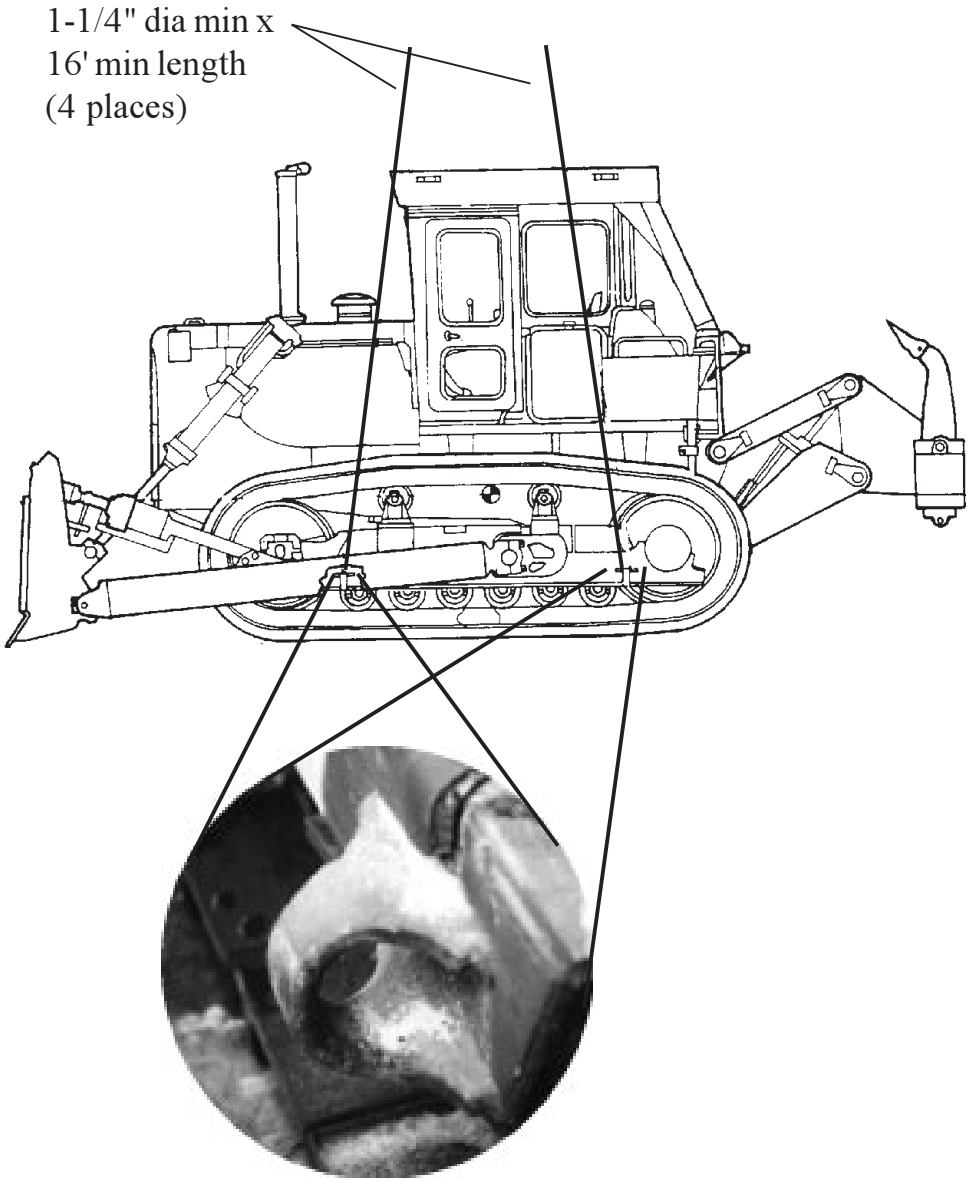

Other similar lifts: None

D7 Caterpillar tractor with blade and ripper.

Back to Contents

Section VII. Lifting Containers

Table 7-1 summarizes the container lifting procedures in this handbook.

Table 7-1. Containers (Lifting).

Configuration	Page
Twist locks	7-2
Rectangular spreader	7-3
"H" spreader w/shackles	7-4
Bottom corner fittings	7-5
Container/chassis combination	7-6

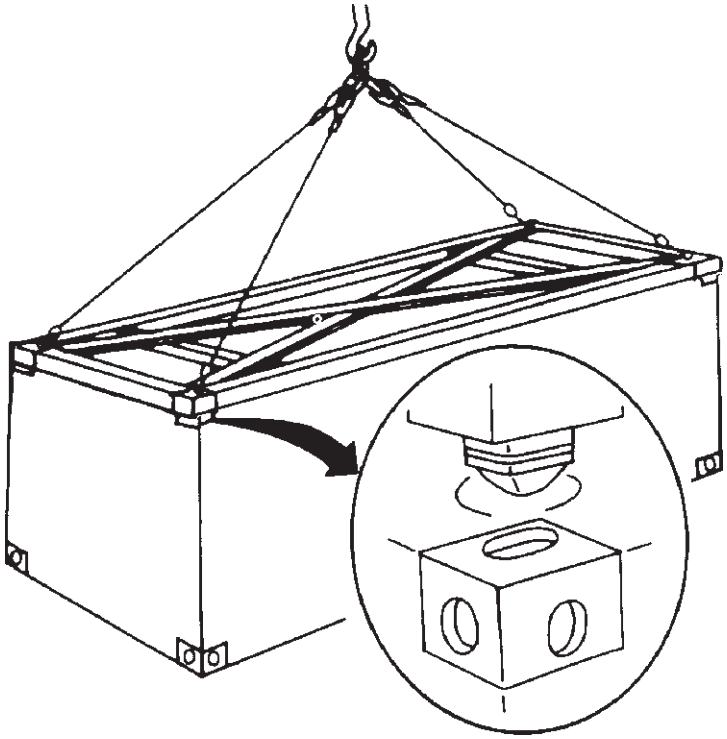

Twist locks.

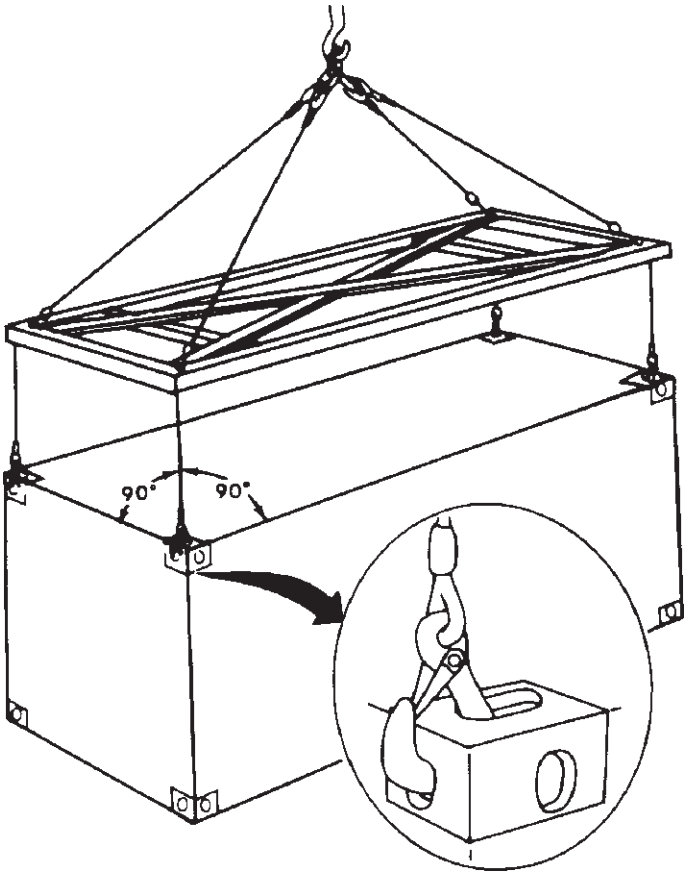

Rectangular spreader.

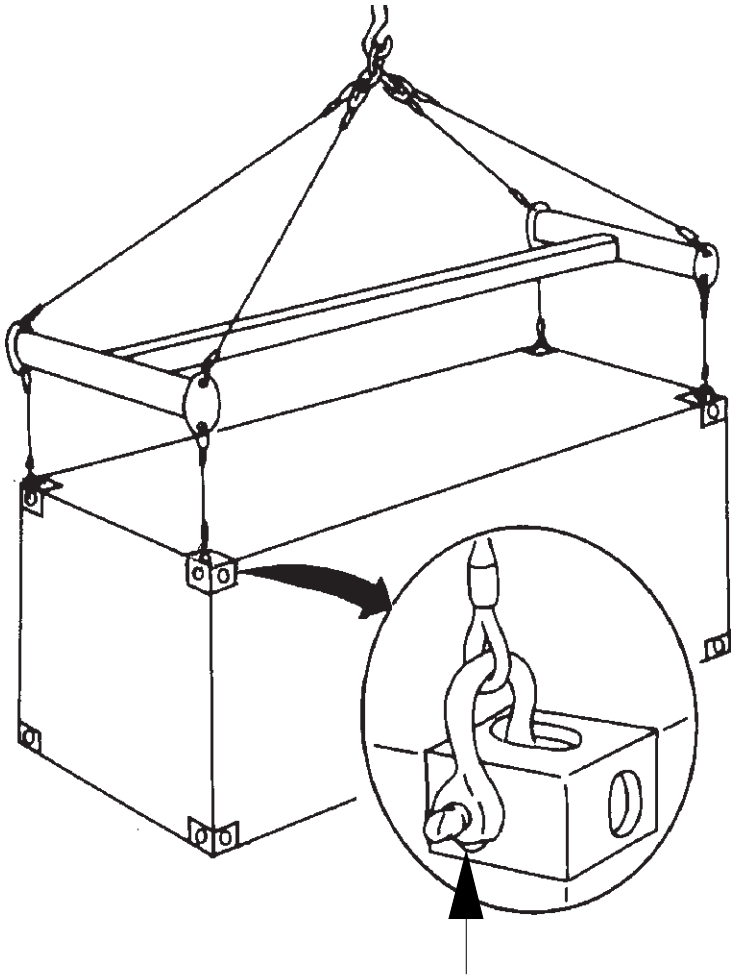

"H" type fixed spreader bar with shackles.

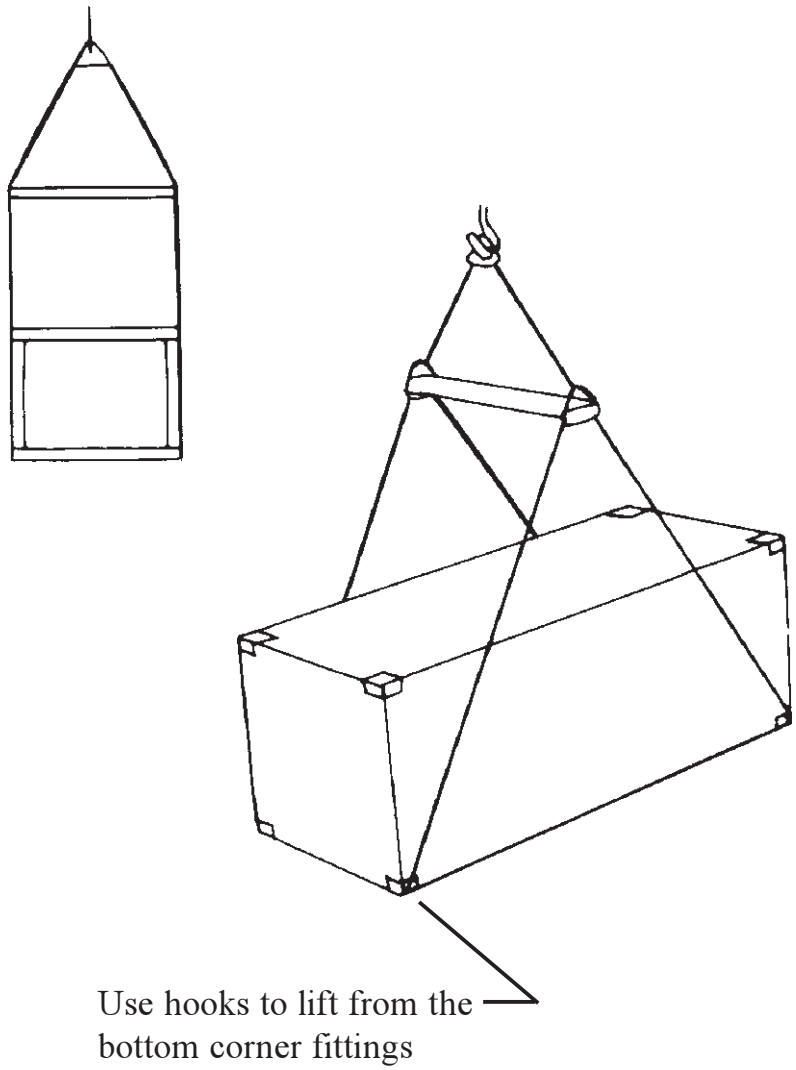

Other similar lifts: M1077 flatrack, M1 enhanced flatrack

Lifting by bottom corner fittings.

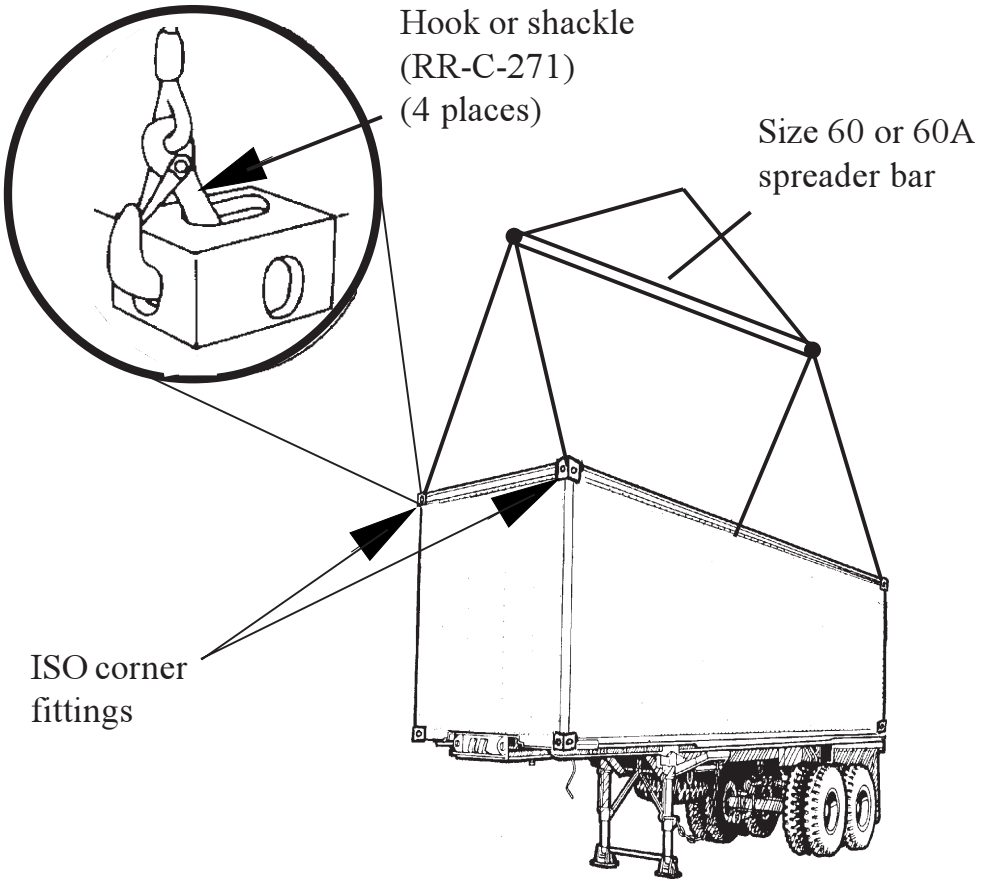

CAUTION

Do not exceed the gross combination weight.

NOTE
Telescopic spreader or nonpowered spreaders may also be used for lifting.

Other similar lifts: None

ISO 20-foot container/chassis combination.

Back to Contents

Lifting Index

Model	Item	Lifting Section Page
D7G	Caterpillar Tractor, w/ blade and ripper	6-10
HP15T	Trlr, Flatbed, Tilt Deck, 15-ton	5-17
H40XL	Forklift, 4K, Hyster	4-28
H60XL	Forklift, 6K, Hyster	4-28
MT250	Crane, Truck-Mounted, 25-ton	4-27
MT300	Crane, Truck-Mounted, 30-ton	4-27
MW24C	Loader, Scoop, Wheel	4-8
M1	Tank, Combat	6-3
M1A1	Tank, Combat	6-3
M1A2	Tank, Combat	6-3
M2	Vehicle, Infantry Fighting	6-5
M2A1	Vehicle, Infantry Fighting	6-5
M2A2	Vehicle, Infantry Fighting	6-5
M3	Vehicle, Cavalry Fighting	6-5
M3A1	Vehicle, Cavalry Fighting	6-5
M3A2	Vehicle, Cavalry Fighting	6-5
M9	Earthmover, Armored Combat	6-6
M10A	Trk, Forklift, 10,000 lb, RT	4-8
M35A1/2	Trk, Cargo, 2-1/2-ton, WWN	4-11
M49A2C	Trk, Tank, Fuel, 2-1/2-ton, WWN	4-11
M50A3	Trk, Tank, Water, 2-1/2-ton, WWN	4-11
M51A2	Trk, Dump, 5-ton, WWN	4-11
M52	Trk, Tractor, 5-ton	4-12
M62	Trk, Wrecker, Mec, WWN	4-11
M63	Trk, Chassis, 5-ton, WWN	4-11
M88A1E1	Vehicle, Recovery	6-3
M101A2	Trlr, Cargo, 3/4-ton	5-4
M105A2	Trlr, Cargo 1-1/2-ton	5-4
M106A2	Carrier, Mortar, 107-mm	6-8
M107A1/A2	Trlr, Tank, Water, 1-1/2-ton	5-6

Model	Item	Lifting Section Page
M109A3	Trk, Van, Shop 2-1/2-ton, WWN	4-11
M109A6	Howitzer, 155-mm, Med, SP	6-8
M110A2	Howitzer, 8-in., Hvy, SP	6-4
M113A2	Carrier, Personnel	6-8
M116A2	Trlr, Cargo, 3/4-ton, 2 wheel	5-4
M116A3	Trlr, Cargo, 3/4-ton, 2 wheel	5-4
M118A1	Semitrlr, Stake, 6-ton	5-5
M119A1	Semitrlr, Van, Cargo, 6-ton	5-5
M125A2	Carrier, Mortar, 81-mm	6-8
M127A1C	Semitrlr, Stake, 12-ton	5-5
M128A1C	Semitrlr, Van, Cargo, 12-ton	5-5
M129A2C	Semitrlr, Van, Supply, 12-ton	5-5
M131A4	Semitrlr, Fuel, 5000 Gal.	5-14
M146	Semitrlr, Van, Shop, 6-ton	5-5
M149A2	Trlr, Tank, Water, 1-1/2-ton	5-6
M172A1	Semitrlr, Lowbed, 15-25-ton	5-7
M246A2	Trk, Wrecker, Med, WWN	4-11
M270A1	Semitrlr, Lowbed	5-8
M275A2	Trk, Tractor, 2-1/2-ton, WWN	4-11
M291A1D	Trk, Van, Exp, 2-1/2-ton	4-17
M310	Trlr, Cable, Reel, 3-1/2-ton	5-6
M313	Semitrlr, Van Expand, 6-ton	5-5
M332	Trlr, Ammo/Gen Cargo, 1-1/2-T	5-6
M342A2	Trk, Dump, 2-1/2-ton, WWN	4-11
M349A1	Semitrlr, Van, Refr, 7-1/2-ton	5-5
M373A2	Semitrlr, Van, Electronic, 6-ton	5-5
M416A1	Trlr, Cargo, 1/4-ton	5-9
M447	Semitrlr, Van, Shop, 6-ton	5-5
M543A2	Trk, Wrecker, Med, WWN	4-12
M548A1/E1	Carrier, Cargo, 6-ton	6-9
M577A2	Carrier, Command Post	6-8
M728	Vehicle, Cbt Engr, Full Track	6-4
M747	Semitrlr, Lowbed, HET, 60-ton	5-11
M813	Trk, Cargo, 5-ton	4-11

Model	Item	Lifting Section Page
M813A1	Trk, Cargo, 5-ton, WWN	4-11
M814	Trk, Cargo, 5-ton, WWN	4-11
M815	Trk, Bolster, Log, 5-ton, WWN	4-11
M816	Trk, Wrecker, 5-ton WWN	4-11
M817	Trk, Dump, 5-ton, WWN	4-11
M818	Trk, Tractor, 5-ton WWN	4-12
M819	Trk, Wrecker, 5-ton, WWN	4-11
M820	Trk, Van, Expansible, 5-ton	4-17
M820A2	Trk, Van, Expansible, 5-ton	4-17
M821	Trk, Stake, 5-ton, WWN	4-11
M870A1	Trlr, Lowbed, 40-ton	5-16
M871	Semitrlr, Flatbed, 22-1/2-ton	5-12
M871A1	Semitrlr, Flatbed, 22-1/2-ton	5-12
M872	Semitrlr, Flatbed, 34-ton	5-12
M872A1	Semitrlr, Flatbed, 34-ton	5-12
M901A1	Vehicle, Cbt, Improved TOW	6-8
M911	Trk, Tractor, HET, 22-1/2-ton	4-13
M915	Trk, Tractor Line Haul, 14-ton	4-14
M915A1	Trk, Tractor Line Haul, 25-ton	4-14
M915A2	Trk, Tractor Line Haul, 25-ton	4-14
M916	Trk, Tractor, LET	4-14
M916A1	Trk, Tractor, LET	4-14
M917	Trk, Dump, 20-ton	4-15
M918	Trk, Bituminous, 22-1/2-ton	4-15
M919	Trk, Concrete, Mixer, 22-1/2-ton	4-15
M920	Trk, Tractor, MET, 20-ton	4-14
M923	Trk, Cargo, 5-ton	4-16
M923A1	Trk, Cargo, 5-ton, WWN	4-16
M923A2	Trk, Cargo, 5-ton, WWN	4-16
M924	Trk, Cargo, 5-ton	4-16
M924A1	Trk, Cargo, 5-ton, WWN	4-16
M925	Trk, Cargo, 5-ton	4-16
M925A1	Trk, Cargo, 5-ton, WWN	4-16

Model	Item	Lifting Section Page
M925A2	Trk, Cargo, 5-ton, WWN	4-16
M926	Trk, Cargo, 5-ton	4-16
M926A1	Trk, Cargo, 5-ton, WWN	4-16
M927A1	Trk, Cargo, 5-ton, WWN	4-16
M927A2	Trk, Cargo, 5-ton, WWN	4-16
M928A1	Trk, Cargo, 5-ton, WWN	4-16
M928A2	Trk, Cargo, 5-ton, WWN	4-16
M929	Trk, Dump, 5-ton	4-16
M929A1	Trk, Dump, 5-ton, WWN	4-16
M930	Trk, Dump, 5-ton	4-16
M930A1	Trk, Dump, 5-ton, WWN	4-16
M931	Trk, Tractor, 5-ton	4-16
M931A1	Trk, Tractor, 5-ton, WWN	4-16
M931A2	Trk, Tractor, 5-ton, WWN	4-16
M932	Trk, Tractor, 5-ton, WWN	4-16
M932A2	Trk, Tractor, 5-ton, WWN	4-16
M934	Trk, Van, Expansible, 5-ton	4-17
M934A1	Trk, Van, Expansible, 5-ton	4-17
M935A1	Trk, Van, Expansible,5-ton	4-17
M936	Trk, Wrecker, 5-ton, WWN	4-17
M936A1	Trk, Wrecker, 5-ton, WWN	4-17
M966	Trk, Tow Missile, (HMMWV)	4-24
M967A1	Semitrlr, fuel, 5000 Gal.	5-14
M969A1	Semitrlr, fuel, 5000 Gal.	5-13
M970A1	Semitrlr, fuel, 5000 Gal.	5-14
M970A2	Semitrlr, fuel, 5000 Gal.	5-14
M977	Trk, Cargo, 10-ton (HEMTT)	4-19
M978	Trk, Tank, Fuel (HEMTT)	4-20
M983	Trk, Tractor, 10-ton (HEMTT)	4-21
M984	Trk, Wrecker, 10-ton (HEMTT)	4-22
M984A1	Trk, Wrecker, 10-ton (HEMTT)	4-23
M985	Trk, Cargo, 10-ton (HEMTT)	4-19
M989A1	Trlr, (HEMAT)	5-18

Model	Item	Lifting Section Page
M992	Vehicle, Field Arty Ammo Spt	6-7
M992A1	Carrier, Ammo	6-7
M992A2	Carrier, Ammo	6-7
M996	Trk, Amb, 2-litter (HMMWV)	4-26
M997	Trk, Amb, 1-1/4-ton (HMMWV)	4-26
M998	Trk, Utility, 3/4-ton (HMMWV)	4-24
M1000	Semitrlr, HET	5-15
M1008	Trk, Cargo, 1-1/4-ton (CUCV)	4-25
M1008A1	Trk, Utility, 1-1/4-ton (CUCV)	4-25
M1009	Trk, Utility, 1-1/4-ton (CUCV)	4-25
M1010	Trk, Amb, 1-1/4-ton (CUCV)	4-25
M1015A1	Carrier, Full Track	6-9
M1025	Trk, Armt, 1-1/4-ton (HMMWV)	4-24
M1026	Trk, Utility, 1-1/4-ton (HMMWV)	4-24
M1028	Trk, Cargo, 1-1/4-ton (CUCV)	4-25
M1028A2	Trk, Utility, 1-1/4-ton (CUCV)	4-25
M1035	Trk, Amb, 1-1/4-ton (HMMWV)	4-26
M1037	Trk, Cargo, 1-1/4-ton (HMMWV)	4-26
M1038	Trk, Utility, 1-1/4-ton (HMMWV)	4-24
M1042	Trk, Shelter, 1-1/4-ton (HMMWV)	4-26
M1043	Trk, Armt, 1-1/4-ton (HMMWV)	4-24
M1044	Trk, Armt, 1-1/4-ton (HMMWV)	4-24
M1045	Trk, TOW, 1-1/4-ton (HMMWV)	4-24
M1046	Trk, TOW, 1-1/4-ton (HMMWV)	4-24
M1048	Trlr, MTSS, 6-1/2-ton	5-17
M1059	Carrier, Smoke Gen	6-9
M1061	Trlr, Flatbed, 5-ton	5-17
M1061A1	Trlr, Gen. Purp, 5-ton	5-17
M1073	Trlr, Flatbed, 7-1/2-ton	5-17
M1070	HET Tractor	4-33
M1074	PLS Truck w/flatrack	4-29
M1075	PLS Truck w/flatrack	4-29
M1076	PLS Trailer w/flatrack	4-31

Model	Item	Lifting Section Page
M1077	PLS Flatrack	4-32
M1078	LMTV, Cargo	4-35
M1079	LMTV, Van	4-35
M1081	LMTV, Cargo, A/D	4-35
M1083	MTV, Cargo	4-35
M1084	MTV, Cargo, W/MHE	4-35
M1085	MTV, Long Cargo	4-35
M1086	MTV, Long Cargo, W/MHE	4-35
M1088	MTV, Tractor	4-34
M1089	MTV, Wrecker	4-34
M1090	MTV, Dump	4-35
M1093	MTV, Cargo, A/D	4-35
M1094	MTV, Dump, A/D	4-35
M1097	HHV, HMMWV HeavyVariant	4-26
M1098	Semitrlr, Water, 5000 Gal.	5-14
PU-732/M	Trlr, Power Unit	5-10
RTCH	Rough Terrain Container Handler	4-9
7-1/2-ton	Crane, Rough-Terrain	4-10

Back to Contents

NOTES